DENON

Hi-Fi Component

SERVICE MANUAL
MODEL DRM-740
STEREO CASSETTE TAPE DECK

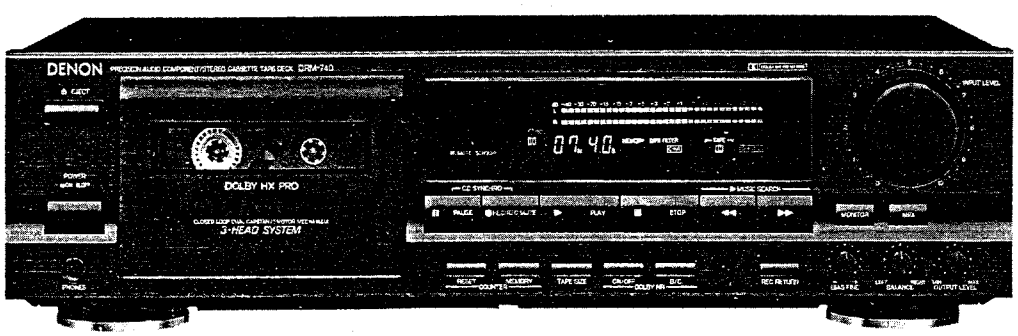

— TABLE OF CONTENTS —

OPERATING INSTRUCTIONS ..... 2~7
SPECIFICATIONS 7
BLOCK DIAGRAM 8
LEVEL DIAGRAM 9
DISASSEMBLY INSTRUCTIONS 10, 11
ADJUSTING AND CHECKING THE MECHANISM SECTION 12, 13
ADJUSTING THE ELECTRICAL SECTIONS 13, 14
PARTS LIST OF KU-9292 AUDIO/METER UNIT ..... 15~17
PARTS LIST OF 3U-2337 POWER SUPPLY UNIT 17
PARTS LIST OF PACKING & ACCESSORIES 18
PARTS LIST OF EXPLODED VIEW 18
EXPLODED VIEW 19
EXPLODED VIEW OF CASSETTE MECHANISM UNIT 20
PARTS LIST OF CASSETTE MECHANISM EXPLODED VIEW 21
P.W. BOARD OF KU-9292 AUDIO/METER UNIT 22
P.W. BOARD OF 3U-2337 POWER SUPPLY UNIT 23
BUNDLE DIAGRAM 23
WIRING DIAGRAM 24
SCHEMATIC DIAGRAM 25
SEMICONDUCTORS 26

NIPPON COLUMBIA CO., LTD.

IMPORTANT TO SAFETY

WARNING:

TO PREVENT FIRE OR SHOCK HAZARD, DO NOT EXPOSE THIS APPLIANCE TO RAIN OR MOISTURE.

CAUTION:

1. **Handle the power supply cord carefully**
   Do not damage or deform the power supply cord. If it is damaged or deformed, it may cause electric shock or malfunction when used. When removing it from wall outlet, be sure to remove by holding the plug attachment and not by pulling the cord.
2. **Do not open the top cover**
   In order to prevent electric shock, do not open the top cover. If problems occur, contact your DENON DEALER.
3. **Do not place anything inside**
   Do not place metal objects or spill liquid inside the cassette tape deck. Electric shock or malfunction may result.

Please, record and retain the Model name and serial number of your set shown on the rating label.

Model No. DRM-740 Serial No. _____

CAUTION
RISK OF ELECTRIC SHOCK
DO NOT OPEN

CAUTION: TO REDUCE THE RISK OF ELECTRIC SHOCK, DO NOT REMOVE COVER (OR BACK). NO USER SERVICEABLE PARTS INSIDE. REFER SERVICING TO QUALIFIED SERVICE PERSONNEL.

The lightning flash with arrowhead symbol within an equilateral triangle is intended to alert the user of the presence of uninsulated "dangerous voltage" within the product's enclosure that may be of sufficient magnitude to constitute a risk of electric shock to persons.

The exclamation point within an equilateral triangle is intended to alert the user of the presence of important operating and maintenance (servicing) instruction in the literature accompanying the appliance.

• FOR U.S.A. & CANADA MODEL ONLY

CAUTION

TO PREVENT ELECTRIC SHOCK DO NOT USE THIS (POLARIZED) PLUG WITH AN EXTENSION CORD, RECEPTACLE OR OTHER OUTLET UNLESS THE BLADES CAN BE FULLY INSERTED TO PREVENT BLADE EXPOSURE.

• POUR LES MODELES AMERICAINS ET CANADIENS UNIQUEMENT

ATTENTION

POUR PREVENIR LES CHOCS ELECTRIQUES NE PAS UTILISER CETTE FICHE POLARISEE AVEC UN PROLONGATEUR UNE PRISE DE COURANT OU UNE AUTRE SORTIE DE COURANT, SAUF SI LES LAMES PEUVENT ETRE INSEREES A FOND SANS EN LAISSER AUCUNE PARTIE A DECOUVERT.

SAFETY INSTRUCTIONS

1. Read Instructions – All the safety and operating instructions should be read before the appliance is operated.
2. Retain Instructions – The safety and operating instructions should be retained for future reference.
3. Heed Warnings – All warnings on the appliance and in the operating instructions should be adhered to.
4. Follow Instructions – All operating and use instructions should be followed.
5. Water and Moisture – The appliance should not be used near water – for example, near a bathtub, washbowl, kitchen sink, laundry tub, in a wet basement, or near a swimming pool, and the like.
6. Carts and Stands – The appliance should be used only with a cart or stand that is recommended by the manufacturer.

6A. An appliance and cart combination should be moved with care. Quick stops, excessive force, and uneven surfaces may cause the appliance and cart combination to overturn.

7. Wall or Ceiling Mounting – The appliance should be mounted to a wall or ceiling only as recommended by the manufacturer.
8. Ventilation – The appliance should be situated so that its location or position does not interfere with its proper ventilation. For example, the appliance should not be situated on a bed, sofa, rug, or similar surface that may block the ventilation openings; or, placed in a built-in installation, such as a bookcase or cabinet that may impede the flow of air through the ventilation openings.
9. Heat – The appliance should be situated away from heat sources such as radiators, heat registers, stoves, or other appliances (including amplifiers) that produce heat.
10. Power Sources – The appliance should be connected to a power supply only of the type described in the operating instructions or as marked on the appliance.
11. Grounding or Polarization – Precautions should be taken so that the grounding or polarization means of an appliance is not defeated.

FIGURE A
EXAMPLE OF ANTENNA GROUNDING AS PER NATIONAL ELECTRICAL CODE

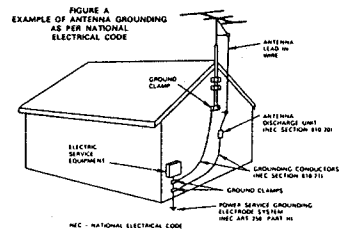

12. Power-Cord Protection – Power-supply cords should be routed so that they are not likely to be walked on or pinched by items placed upon or against them, paying particular attention to cords at plugs, convenience receptacles, and the point where they exit from the appliance.
14. Cleaning – The appliance should be cleaned only as recommended by the manufacturer.
15. Power Lines – An outdoor antenna should be located away from power lines.
16. Outdoor Antenna Grounding – If an outside antenna is connected to the receiver, be sure the antenna system is grounded so as to provide some protection against voltage surges and built-up static charges. Article 810 of the National Electrical Code, ANSI/NFPA 70, provides information with regard to proper grounding of the mast and supporting structure, grounding of the lead-in wire to an antenna-discharge unit, size of grounding conductors, location of antenna-discharge unit, connection to grounding electrodes, and requirements for the grounding electrode. See Figure A.
17. Nonuse Periods – The power cord of the appliance should be unplugged from the outlet when left unused for a long period of time.
18. Object and Liquid Entry – Care should be taken so that objects do not fall and liquids are not spilled into the enclosure through openings.
19. Damage Requiring Service – The appliance should be serviced by qualified service personnel when:
    A. The power-supply cord or the plug has been damaged; or
    B. Objects have fallen, or liquid has been spilled into the appliance; or
    C. The appliance has been exposed to rain; or
    D. The appliance does not appear to operate normally or exhibits a marked change in performance; or
    E. The appliance has been dropped, or the enclosure damaged.
20. Servicing – The user should not attempt to service the appliance beyond that described in the operating instructions. All other servicing should be referred to qualified service personnel.

NOTE ON USE/OBSERVATIONS RELATIVES A L'UTILISATION/NOTAS SOBRE EL USO

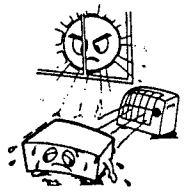

- Avoid high temperatures
  Allow for sufficient heat dispersion when installed on a rack.
- Eviter des températures élevées
  Tenir compte d'une dispersion de chaleur suffisante lors de l'installation sur une étagère.
- Evite altas temperaturas
  Permite la suficiente dispersión del calor cuando está instalado en la consola.

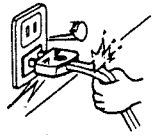

- Handle the power cord carefully. Hold the plug when unplugging the cord.
- Manipuler le cordon d'alimentation avec précaution.
  Tenir la prise lors du débranchement du cordon.
- Maneje el cordón de energía con cuidado.
  Sostenga el enchufe cuando desconecte el cordón de energía.

- Keep the set free from moisture, water, and dust.
- Protéger l'appareil contre l'humidité, l'eau et la poussière.
- Mantenga el equipo libre de humedad, agua y polvo.

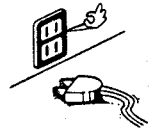

- Unplug the power cord when not using the set for long periods of time.
- Débrancher le cordon d'alimentation lorsque l'appareil n'est pas utilisé pendant de longues périodes.
- Desconecte el cordón de energía cuando no utilice el equipo por mucho tiempo.

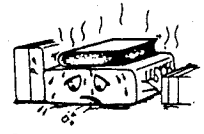

*(For sets with ventilation holes)

- Do not obstruct the ventilation holes.
- Ne pas obstruer les trous d'aération.
- No obstruya los orificios de ventilación.

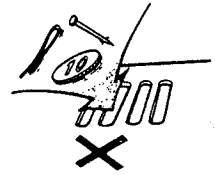

- Do not let foreign objects in the set.
- Ne pas laisser des objets étrangers dans l'appareil.
- No deje objetos extraños dentro del equipo.

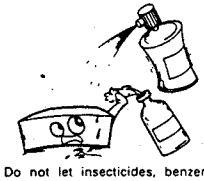

- Do not let insecticides, benzene, and thinner come in contact with the set.
- Ne pas mettre en contact des insecticides, du benzène et un diluant avec l'appareil.
- No permita el contacto de insecticidas, gasolina y diluyentes con el equipo.

- Never disassemble or modify the set in any way.
- Ne jamais démonter ou modifier l'appareil d'une manière ou d'une autre.
- Nunca desarme o modifique el equipo de ninguna manera.

Thank you very much for purchasing the DENON component stereo cassette tape deck.
DENON proudly presents this advanced tape deck to audiophiles and music lovers as a further proof of DENON's non-compromising pursuit of the ultimate in sound quality. The high quality performance and easy operation are certain to provide you with many hours of outstanding listening pleasure.

Please check to make sure the following items are included with the main unit in the carton:

(1) Operating Instructions 1
(2) Connection Cords 2
(3) Mini-Plug Cable 1

— TABLE OF CONTENTS —

FEATURES 5
CONNECTION 5
NAMES AND FUNCTION OF PARTS 6, 7
CASSETTE TAPES 7
AUTO TAPE SELECT FEATURE 7
PLAYBACK 8
MUSIC SEARCH SYSTEM 8
RECORDING 9, 10
PROPER RECORDING LEVEL 9
REC/REC MUTE BUTTON 9
RECORDING BIAS ADJUSTMENT 10
SYNCHRONIZED RECORDING FUNCTION 10
TAPE COUNTER AND MEMORY STOP 11
MONITOR BUTTON 12
DOLBY B AND C NOISE REDUCTION SYSTEM 12
DOLBY HX-PRO HEADROOM EXTENTION SYSTEM 12
IMPORTANT INFORMATION 12
TROUBLESHOOTING 13
SPECIFICATIONS 13
DENON SERVICE NETWORK 31

FEATURES

- Computer controlled silent mechanism
- Closed-loop dual-capstan tape transport
- Non-slip reel drive for stabilizing tape tension
- Dual power supply
- Three-head design utilizes the record/playback combination head assembly.
- Dolby HX PRO System
- Dolby B & C noise reduction system
- Manual bias adjustment control
- Computing linear tape counter with 4-digit readout and memory stop
- REC return system
- Auto tape selector
- Synchronized Recording Function
- Optional remote control system

CONNECTION

- Leave your entire system (including this cassette deck) turned off until all connections between the deck and other components have been made.

Connecting the Deck to an Amplifier

- Before connecting the deck to your amplifier, it is a good practice to review your amplifier's instruction manual.
- Use the white plugs for the left channel, and the red plugs for the right channel.

Tape Dubbing

- Many stereo amplifiers and receivers have tape dubbing circuitry so that tape duplication can be performed between two or more tape decks. Review your amplifier's instruction manual for a full explanation of this mode of operation.

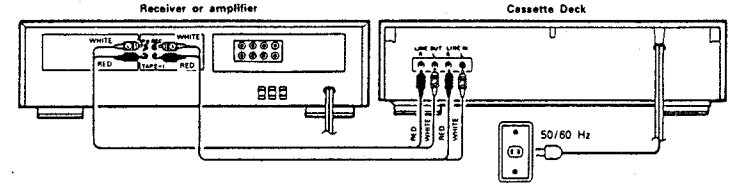

Systems Remote Control

Each of "PLAY, FF, REW, STOP, REC/REC MUTE and PAUSE" functions can be remote controlled with the wireless handset of the receiver (DRA series receivers for IS).

Connecting Headphones

To listen through headphones, plug your headphones into the PHONES jack.

Installation Precautions

If the deck is placed on or too near an amplifier or tuner, noise (induced hum) or beat interference may result (especially during AM or FM reception). If this occurs, separate the deck from other components or reorient its position.

NAMES AND FUNCTIONS OF PARTS

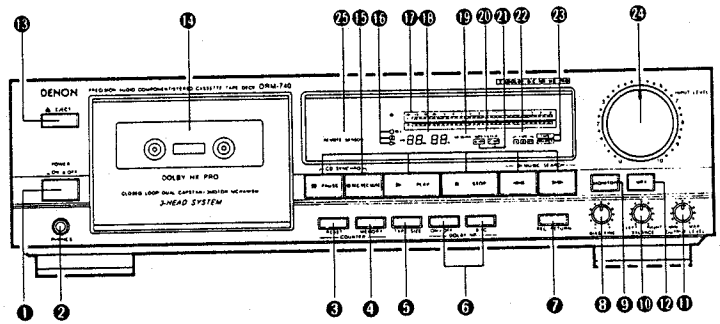

❶ **POWER switch**
Controls the supply of AC power to the deck. One push turns the deck on, a second push turns it off. The deck remains in a stand-by (non-operative) mode for approximately 2 seconds after it is switched on.

❷ **PHONES jack**
For private music enjoyment without disturbing others, or for monitoring a recording, a set of headphones may be plugged in. Impedance should be from 8 to 1200 ohms.

❸ **COUNTER RESET button**
Operation of the button resets the counter to all zero.

❹ **MEMORY STOP button**
During rewinding operations, the tape will stop at the "0000" counter point automatically when this button is pressed in.

❺ **TAPE SIZE button**
You can know accurate elapsed time of the tape by adjusting the TAPE SIZE button to the tape size used.
When the TAPE SIZE button is pressed, the current tape size is displayed for 1 sec in the 4-figures counter. If you further press the button during the display, the tape size will change in the following cycle.

C-90 → C-75 → C-60 → C-100

❻ **DOLBY NR button**
When the left-side DOLBY NR button is pressed once with DOLBY NR being at the "ON" state, DOLBY NR B-TYPE is preferred and turned on. Every time when the rightside B/C button is pressed, B-TYPE and C-TYPE are selected alternatively.

❼ **REC RETURN button**
When this button is pressed at the recording state, the tape is rewound to the starting point. When the starting point is automatically reached, the record standby mode (rec pause state) comes.

❽ **BIAS control**
(for NORMAL, CrO_2 and METAL tape)
Adjust the bias according to the tape characteristics.
Standard biasing is obtained at the center click-stop position.

❾ **MONITOR button**
The SOURCE position of this button allows you to monitor the source program before it is recorded. The TAPE position of this button is used for tape playback monitoring or simultaneous monitoring during recording.

❿ **BALANCE control**
This is the knob to adjust the recording level balance between the left and right channels. Turn it counter-clockwise to reduce the right channel's level and clockwise to reduce the left channel's. Usually, put the knob at the center click position.

⓫ **OUTPUT LEVEL control**
This control adjusts playback, recording monitor, and headphones output levels for the both channels simultaneously.

⓬ **MPX filter button**
The MPX FILTER button should be used to prevent interference with the Dolby NR circuit when making Dolby NR encoded recordings of FM stereo programs.
When making Dolby NR encoded recordings from any program source other than FM stereo, leave this button in the "OFF" position.

⓭ **EJECT button**
Press this button to eject the cassette. When the deck is operating (tape is running), press the stop (■) button first to stop the tape transport; then press the EJECT button.

⓮ **Cassette compartment cover**
If this compartment cover is not closed completely, the deck's transport controls will remain inoperative.

⓰ **PLAY, PAUSE and REC indicator**
When the PLAY, REC PAUSE and REC buttons are pressed, this indicator will light.

⓱ **Fluorescent peak meters**
These meters indicate recording or playback peak levels for each channel. For peak levels exceeding −7dB, the Auto Peak Hold Feature holds the peak level reading for approximately 1 seconds.

⓲ **Linear tape counter**
Tape-passage is indicated digitally in minutes and seconds.

⓳ **MEMORY Indicator**
This indicator light is interlocked with the memory stop button. (MEMORY)

⓴ **FILTER indicator**
This indicator light is interlocked with the MPX FILTER button. (FILTER)

㉑ **NR system indicator**
This indicator light is interlocked with the DOLBY NR button and informs the user that DOLBY NR is in use as well as which B-TYPE or C-TYPE.

㉒ **TAPE select indicator**
This indicator light is interlocked with the Auto Tape Select feature which automatically adjusts the deck to the type of tape in use. (TYPE I TYPE II or TYPE IV).

㉓ **MONITOR indicator**
This indicator light is interlocked with the MONITOR button to inform the use of the selected monitoring source – TAPE or SOURCE.

㉔ **INPUT LEVEL control**
The recording input level is adjusted by this knob. The levels in the left and right channels can be changed simultaneously.

㉕ **REMOTE SENSOR**
This sensor receives the infrared light transmitted from the wireless remote control unit.
For remote control point the wireless remote control unit at the sensor.

⓯ Tape transport controls

▶ PLAY	Play button	Press to playback tape.
■ STOP	Stop button	Press to stop tape in any mode.
◀◀	REW button	Press for fast rewind.
▶▶	FF button	Press for fast forward tape winding.
● REC/REC MUTE	RECORD/MUTE button	To begin recording, press the RECORD and PLAY button simultaneously. If only the RECORD button is pressed, the deck is placed in the REC PAUSE (record standby) mode. When this button is pressed under the REC PAUSE state, the mode shifts to the Auto Rec Mute. When this button is pressed for making a non-recorded part between two melodies, about 5 sec of non-recorded part can automatically be created.
II PAUSE	PAUSE button	Press this button to enter the recording pause mode from the recording or recording mute mode. Press this button to enter the playback pause mode from playback mode.

CASSETTE TAPES

■ Handling Precautions

- C-120 cassettes
  C-120 cassette are not recommended as they use a very thin tape base which may become tangled around the capstan or pinchroller.
- Tape slack
  This cassette deck incorporates an automatic tape slackness preventive mechanism, but it can not prevent such a slackness as shown below. Remove it with a pencil or the like prior to use.

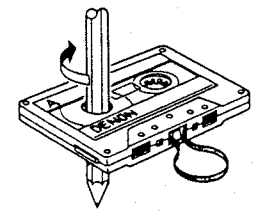

■ Storage Precautions

- Do not store cassette tapes in a place where they will be subject to:
  - Extremely high temperature or excessive moisture
  - Excessive dust
  - Direct sunlight
  - Magnetic fields (near TV sets or speakers)
- To eliminate tape slack, store your cassettes in cassette cases with hub stops.

■ Accidental Erasure Prevention

- Every cassette has erasure prevention tabs for each side.
  To protect your valuable recorded tapes from accidental or inadvertent erasure, remove the tab for the appropriate side with a screwdriver or other tools.
- To record on a tape with the erasure prevention tabs removed, cover the tab holes with plastic tape.

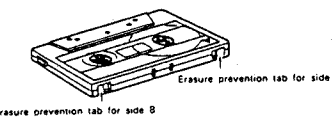

AUTO TAPE SELECT FEATURE

This Stereo Cassette Deck contains an Auto Tape Select feature which automatically selects the optimum bias and equalization for the tape in use. This is accomplished by detection of tape type detection holes in the cassette housing.

- If a tape without tape type detection holes is used, the deck will automatically adjust itself for normal tapes.

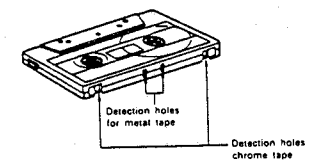

PLAYBACK

- Switch on your amplifier or receiver.
- Set the TAPE MONITOR switch on your amplifier or receiver to the TAPE position.

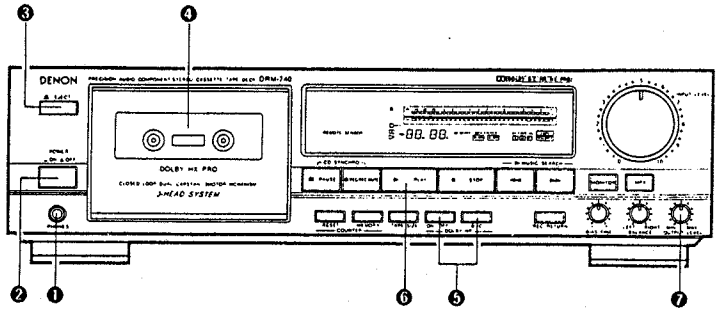

❶ **PHONES**
Playback sound is fed into the headphones set.

❷ **POWER**
Push the switch to turn "ON" (▲) the power.

❸ **EJECT**
Press the EJECT button to open the cassette compartment.

❹ **Cassette Compartment Cover**
Load the CASSETTE TAPE.

❺ **DOLBY NR**
For recordings made without Dolby NR, set to "OFF".
For recordings made with Dolby B NR, set to "B".
(The B-TYPE indicator will light up.)
For recordings made with Dolby C NR, set to "C".
(The C-TYPE indicator will light up.)

❻ **▶ PLAY**
Push the PLAY KEY (The ▶ PLAY indicator will light up).
- When playback is finished, press the stop (■ STOP) button.
- To restart the tape, press the PLAY (▶ PLAY) button.
- If different types of Dolby Noise Reduction are used for record and playback, playback response will be adversely effected.

❼ **OUTPUT**
Check to make sure the OUTPUT LEVEL.

> **Note:**
> If the power switch is turned OFF in either the recording or playback mode, the cassette cannot be removed, even if the EJECT button is pressed.
> Please turn the power switch ON again, and then in stop mode, press the EJECT button to remove the cassette tape.

■ MUSIC SEARCH SYSTEM

This device is a convenient system which detects the non-recorded part of more than 4 seconds between melodies, cues the next melody while the present melody is being reproduced or automatically detects the beginning of the melody now being reproduced and makes it into the reproduceable state.

1. For cueing the next melody while the present melody is being reproduced:
   At PLAY mode, depress the PLAY button and the FF button simultaneously. This device will detect the interval between melodies with the CUE state on, automatically become the PLAY mode and begin performing the next melody.
2. For hearing again the melody being reproduced:
   At PLAY mode, depress the PLAY button and the REW button simultaneously. This device will detect the interval between melodies with the REVIEW state on, automatically become the PLAY mode, detect the beginning of the melody now being performed and play it from the first again.

Note: Note about MUSIC SEARCH action:
MUSIC SEARCH is a function which operates by detecting a comparatively long non-recorded part on the tape. Therefore, MUSIC SEARCH may not operate normally in the following cases.
- Sound on the tape is interrupted by speech or conversation.
- Long periods of pianissimo (softly played music) or non-recorded intervals occur on the tape.
- The tape has picked up noise in a non-recorded interval.
- Non-recorded intervals on the tape are less than 4 seconds in length.
- Noise-emitting electrical appliances are in operation nearby, i.e.: Electric razors, drills, refrigerators, etc.

RECORDING

- Switch on the source component (tuner, amplifier, etc.).
- Set the TAPE MONITOR switch on your amplifier or receiver to the SOURCE position

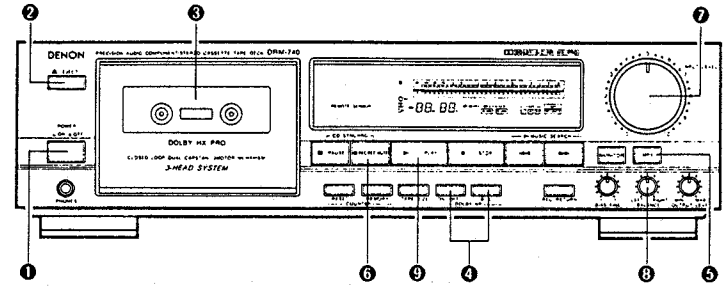

❶ **POWER**
Push the switch to turn "ON" (▲) the power.

❷ **EJECT**
Press the EJECT button to open the cassette compartment.

❸ **Cassette Compartment Cover**
(Make sure the erasure prevention tab has not been removed from the cassette shell half.)

❹ **DOLBY NR**
Set, in accordance with the recording to be made.
For recordings without Dolby NR, set to "OFF". For recordings with Dolby B NR, set to "B" (The B-TYPE indicator will light up). For recordings with Dolby C NR, set to "C" (The C-TYPE indicator will light up).
Future mistakes during playback can be avoided if the cassette is so marked for Dolby NR encoded recordings.

❺ **MPX FILTER**
Button it "ON" for the DOLBY NR recording of FM broadcasts (The FILTER indicator will light up).

❻ **● REC/REC MUTE**
When pressed, the deck goes into the record standby mode. The ● REC and II indicator will light.
Initial setting of recording levels should be made in the record standby mode.

❼ **INPUT LEVEL**
Used to set the recording level.

❽ **BALANCE**
Adjust the recording level balance between the left and right channels.

❾ **▶ PLAY**
When pressed, the recording will start.
(The ▶ and ● REC indicators will light up).

Caution:
Be careful not to erase important recordings by mistake.
Mis-erasing can be aboided by following the two steps below:
1. If the PLAY (▶ PLAY) button is pressed while the ● REC indicator is on, the tape will be recorded.
2. If the PLAY (▶ PLAY) and RECORD (● REC) button are pressed at the same time, the tape will be recorded.

- **REC RETURN Button**
  Use of the recording return function is convenient when re-recording or when cancelling a recording. When pressed during recording, the tape is rewound to the position where recording started, and the deck will enter the recording standby mode.
- When recording is finished, press the STOP (■ STOP) button.

■ PROPER RECORDING LEVEL

A too high recording level can saturate the tape and cause distortion. On the other hand, if the recording level is set too low, soft passages will be marked by residual noise. A proper recording level is the single most important factor for making well balanced recordings.

Guideline for maximum recording level

TYPE I (Normal)	+1 dB level on peaks
TYPE II (CrO_2)	+3 dB level on peaks
TYPE IV (Metal)	+5 dB level on peaks

Note: Optimum recording levels can differ depending on program sources or the type of tape used.
Make trial recordings using the simultaneous monitoring. Refer to the description under "MONITOR" Button.

Meter reading differences between Left and Right channels
The left and right channel readings of the Peak Level Meter can differ due to variations in the input signal levels. In such cases, use the BALANCE control to adjust the channel input balance until identical meter readings are obtained for both channels.

■ REC/REC MUTE BUTTON

1. When you want to make about 5 sec of non-recorded part after the recording state:
   Press the REC/REC MUTE button. The recorder will automatically create about 5 sec of non-recorded part and will stay in the recording standby state.
2. To create about 5 sec of non-recorded part after the standby state:
   Press the REC/REC MUTE button, and the recorder will enter the non-recording state, automatically create about 5 sec of non-recorded part and stay in the standby state.
3. To cancel the non-recording state (the REC MUTE state).
   Press the PAUSE button, and the recorder will cancel the non-recording state and will stay in the standby state.
4. To extend the non-recording state (the REC MUTE state) for further 5 sec or more:
   Press the REC/REC MUTE button, and the non-recorded part will automatically be extended for another 5 sec.

■ **RECORDING BIAS ADJUSTMENT**

For best recording results, monitoring during recording and comparing different recordings using your own judgement are essential.
The DENON cassette deck is equipped with a BIAS FINE control to assist you in setting the proper bias for different types and brands of tape. At the center stop-click position, the deck is set to the reference bias level for Normal, CrO_2 and Metal tape. If the resulting recording in this position has too much or too little high frequency content, adjusting the BIAS FINE control can be useful to achieve better results. If the high frequencies (treble sounds) are to be boosted, turn the BIAS FINE control counter-clockwise to decrease the bias current. Turn the control clockwise to increase bias current.

By the use of this control, you can record tapes with a frequency response that will perfectly match your listening taste.

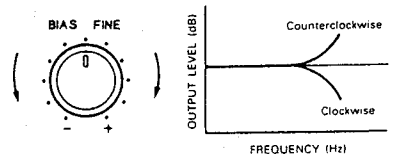

SYNCHRONIZED RECORDING FUNCTION

- Convenient synchronized recording can be performed when used in combination with a DENON CD player equipped for the synchronized recording function.
- SYNCHRO Jack Connection Connect the SYNCHRO Jack with a DENON CD player which is equipped with a SYNCHRO jack, then make a synchronized recording. Use the connection cord supplied with this cassette deck.
- Switch on your amplifier or receiver and the CD player.
- Set the tape Monitor switch on your amplifier or receiver to the source position.

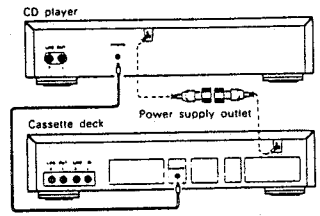

① Load the tape, the disc you want to record into the CD player.
② Following the recording instructions on page 9, set the Dolby NR mode, and the input level.
③ Set the CD player to the stop or pause mode.
④ Press the REC/REC MUTE (●) button and REC PAUSE (II) button simultaneously. The cassette deck and CD player are automatically set to the synchronized recording mode. The "■" indicator flashes on the cassette deck and the synchronized recording mode is indicated on the CD player.
(For details, refer to the CD player's operating instructions.)
⑤ To stop synchronized recording, press the stop button.
The synchronized recording mode is cancelled for both the cassette deck and CD player.
⑥ To stop synchronized recording temporarily, press the stop button on the CD player. A 5-second blank space is created on the tape, after which the recording pause mode is set. The "■" indicator flashes. To resume synchronized recording, press the PLAY button on the CD player.

Note:
- If synchronized recording is started when the CD player is in a mode other than the stop or pause mode or when no disc is set, the "■" indicator on the cassette deck flashes and the recording pause mode is set until synchronized recording is possible on the CD player.
- In the synchronized recording mode, only the STOP button will function.

Caution:
- Do not set the cassette deck to the synchronized recording mode when the CD player is in the play mode. Also, do not turn off the power of the cassette deck or the CD player during synchronized recording. Doing so can result in malfunction.
- During the editing operation, when using the editing functions on the CD player, be sure to select a tape with a sufficiently long recording time.
For the CD player's editing functions, refer to the CD player's operating instructions.

TAPE COUNTER AND MEMORY STOP

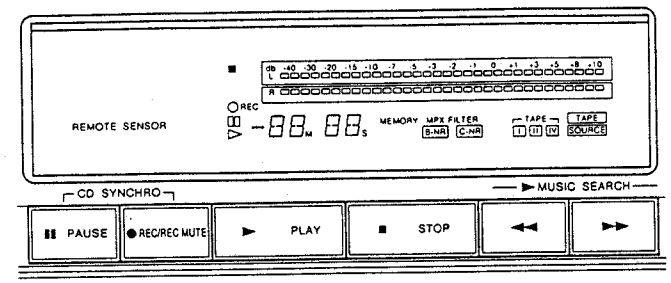

1) Operation of the Tape Counter
(1) Press the RESET button to reset the " 00.00 ".
(2) By using the PLAY, FF, or REW function, the reading of the counter indicate in minutes and seconds.
- During recording and playback operations, the counter is useful for noting the location of existing programs or positions where recording is to be started.
- The reading of this counter does not correspond with that of any other deck.
- The linear counter of this machine is designed to be suitable for the cassette tape with a small hub.
Therefore if a cassette tape with a large hub is used is this machine, some error will occur in the display on the counter.

2) MEMORY STOP Operation
(1) During recording or playback operations, MEMORY STOP can be used to locate a particular point on the tape. At the desired point, reset the counter to " 00.00 ". With the MEMORY STOP button in the "ON" position, the deck will stop at the " 00.00 " point (actually " −00.02 " and " 00.00 ") during REWIND operations.
(2) The MEMORY indication will light when this function is activated.
(3) Notes:
- When the power is turned "OFF", this function is automatically deactivated.
- The MEMORY STOP is accurate to −5 on the counter, and will stop between " −00.02 " and " 00.00 ".
- The MEMORY STOP is released by pressing the EJECT button.
- The MEMORY STOP does not operate during the REC RECTURN.

3) Display Back-up
(1) The functions DOLBY NR, MPX FILTER, MONITOR and TAPE SIZE are protected by 24-hour memory back-up.
After 24 hours, DOLBY NR and MPX FILTER are set to "OFF", MONITOR is reset to "TAPE", TAPE SIZE is reset to "C-90".

MONITOR BUTTON

This Stereo cassette deck uses a three-head system which permits simultaneous "off-the-tape monitoring" during recording. Incidentally, as this Stereo Cassette Deck adopts an automonitor system, [TAPE] or [SOURCE] can automatically be activated according to the operation conditions. These modes can also be activated manually.

Recording	Monitor button ➡ [TAPE] 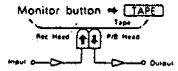	The signal recorded on the tape is monitored simultaneously "off-the-tape". This monitoring mode enables you easy check for optimum recording levels. In the [TAPE] mode, the FL PEAK METER indicates the signal levels played back off-the-tape.
	Monitor button ➡ [SOURCE] 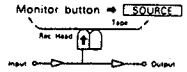	The [SOURCE] position enables you to monitor the input source signal before it is recorded on the tape. Using the FL PEAK METER, this mode is convenient for setting recording levels or input level monitoring during recording.
Playback	Monitor button ➡ [TAPE] 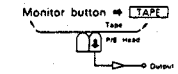	During playback, the MONITOR button must be placed in the [TAPE] position. If it is set in the SOURCE position, the signal from the tape won't be heard.

DOLBY B AND C NOISE REDUCTION SYSTEM

- The Dolby noise reduction system substantially reduces the tape background noise (hiss) inherent in the cassette medium. Dolby B NR is most widely in use. However, Dolby C NR is a much more recent development and represents a significantly improvements over Dolby B NR.
- Tape background noise consists primarily of high frequency information, which is particularly annoying during soft passages. The Dolby NR system increase the level of low volume mid and high frequency signal during recording and reduces the level of these signals by an identical amount during playback. As a result, the playback signal is identical to the original source signal, but the level of background noise generated by the tape is greatly reduced.
- The operating principle of Dolby C NR is similar to that of Dolby B NR except for the encoding/decoding response curves. The noise reduction effect obtained with Dolby C NR is up to 20 dB, compared to 10 dB with Dolby B NR. In addition, Dolby C NR uses an anti-saturation network and spectral skewing circuitry, for a significant improvement in the dynamic range of the mid- to high-frequencies.

DOLBY HX-PRO HEADROOM EXTENSION SYSTEM

This deck is equipped with the DOLBY HX-PRO headroom extension system. Since the system functions automatically during recording, no switching operation or adjustment is required. The system is effective with any type of Normal, CrO_2 or Metal tapes.
The Dolby HX-PRO headroom extension system functions during recording to lift up the saturation level in the treble range. Therefore, most of the treble range components distorted or lost during recording on conventional cassette decks are more faithfully recorded on the new DRM-740 cassette deck.

Features of the DOLBY HX-PRO headroom extension system

(1) Performance of Normal and CrO_2 tapes can be upgraded closer to that of Metal tapes.
(2) The dynamic range in the treble is improved significantly.
(3) Since no decoding in playback is necessary, the improvement can be obviously heard on any hi-fi playback system including portable components and car systems.
(4) The system functions whether the Dolby B/C NR is engaged or not.

IMPORTANT INFORMATION

Condensation
- Water droplets may form on the such important parts of the deck as the rotating parts or head when the deck is used in humid places or exposed to sudden temperature changes, such as if it is moved suddenly from a cold place to a warm place.
- The tape can be damaged or the deck may not operate if it is used under these conditions. If condensation forms, let the deck sit at room temperature for about one hour before using it.

Cleaning the Head
- A head cleaning cassette is needed to clean the recording/playback head on this deck.
- The quality of the playback or recording sound will be poor if the head is dirty. Always keep the head clean.
- Clean the head periodically, about every 10 hours of use, in order to take full advantage of the deck's performance and enjoy quality sound.

Demagnetizing the Head
- The head becomes magnetized after it are used for a long period of time or if it is exposed to magnetic forces. This results in noise and reduced treble.
- If the head is magnetized, use a cassette-type head demagnetizer, available in stores, and demagnetize it.

TROUBLESHOOTING

Make sure of the followings before you consider as any malfunctions:

1. Are all the connections correct?
2. Is the set being operated correctly in accordance with the operating instructions?
3. Are the speakers and amplifiers functioning correctly?

If the tape deck still does not function properly, check it again, using the check list below. If the symptom does not correspond to the check list, please contact your DENON dealer.

Problem	Cause	Remedy
Tape does not run.	• Power cord is off. • Tape is completely wound up. • Tape is loose • Cassette is not loaded properly • Defective cassette.	• Check power cord. • Rewind tape. • Tighten tape with a pencil, etc • Load cassette properly • Replace cassette
Tape is not recorded when recording button is pressed.	• No cassette is loaded. • Erase prevention tab is broken off.	• Load cassette. • Cover hole with plastic tape
Sound is warbled or distorted.	• Heads, capstan or pinchroller are contaminated. • Tape is wound too tight. • Recording input level is too high. • Tape is worn out and has "drop-outs"	• Clean them. • Fast forward or rewind to loosen tape winding • Adjust recording input level. • Replace tape.
Excessive noise	• Tape is worn. • Heads, capstan or pinchroller are contaminated. • Heads are magnetized. • Recording input level is too low.	• Replace tape. • Clean them. • Demagnetize heads. • Adjust recording input level.
High frequency range (treble) is emphasized.	• Dolby NR button is set improperly.	• Set Dolby NR button properly.
High frequency range (treble) is lost.	• Heads are contaminated. • Tape is worn.	• Clean them. • Replace tape.
When a CrO_2 or metal tape is placed in the deck, a diffrent tape indicator comes on.	• The cassette housing is of an older design without tape type detection holes.	• Use the latest cassette with tape type detection holes.
The cassette tape cannot be removed.	• If the power switch is turned off either the recording or playback mode, and the unit is stopped, there may be case when the cassette cannot be removed, even if the EJECT button is pressed.	• Turn the power switch ON again, and then press the stop (■) button. • Then, in the stop mode, press the EJECT button to remove the cassette tape.

SPECIFICATIONS

Type	Vertical tape loading 4-track 2-channel stereo cassette deck
Heads	Recording & Playback (combination head) × 1 Erase (Double gap ferrite head) × 1
Motors	Capstan (DC servo motor) × 1 Reel (DC motor) × 1 Actuator (DC motor) × 1
Tape Speed	4.8 cm/sec.
Fast Forward, Rewind Time	Approx. 100 sec. with a C-60 cassette
Recording Bias	Approx. 105 kHz
Overall S/N Ratio (at 3% THD level)	Dolby C NR on: more than 75 dB (CCIR/ARM)
Overall Frequency Response	20 ~ 20,000 Hz ±3 dB (at −20 dB, METAL tape)
Channel Separation	more than 40 dB (at 1 kHz)
Crosstalk	more than 65 dB (at 1 kHz)
Wow & Flutter	0.038% Wrms (JIS method), ±0.1% w. peak
Inputs	
LINE	80 mV (−20 dBm) input level at maximum Input impedance: 50 kohm unbalanced
Output	
LINE	620 mV (0 dB) output level at maximum (with 47 kohm load, recorded level of 200 pwb/mm)
HEADHONE	1.2 mW output level at maximum (optimum load impedance 8 ohm ~ 1.2 kohm)
Accessories	Parallel pin cord × 2 Mini-Plug Cable
Power Supply	Voltage is shown on rating label
Power Consumption	16 W
Dimensions	434 (W) × 124 (H) × 275 (D) mm
Weight	4.2 kg

* Above specifications and design are subject to change without prior notice.

Best results will be obtained with use of DENON DX and HD Series cassette tapes.

Dolby noise reduction and HX Pro headroom extension manufactured under license from Dolby Laboratories Licensing Corporation. HX Pro originated by Bang & Olufsen.

"DOLBY", the double-D symbol DD and "HX PRO" are trademarks of Dolby Laboratories Licensing Corporation.

BLOCK DIAGRAM

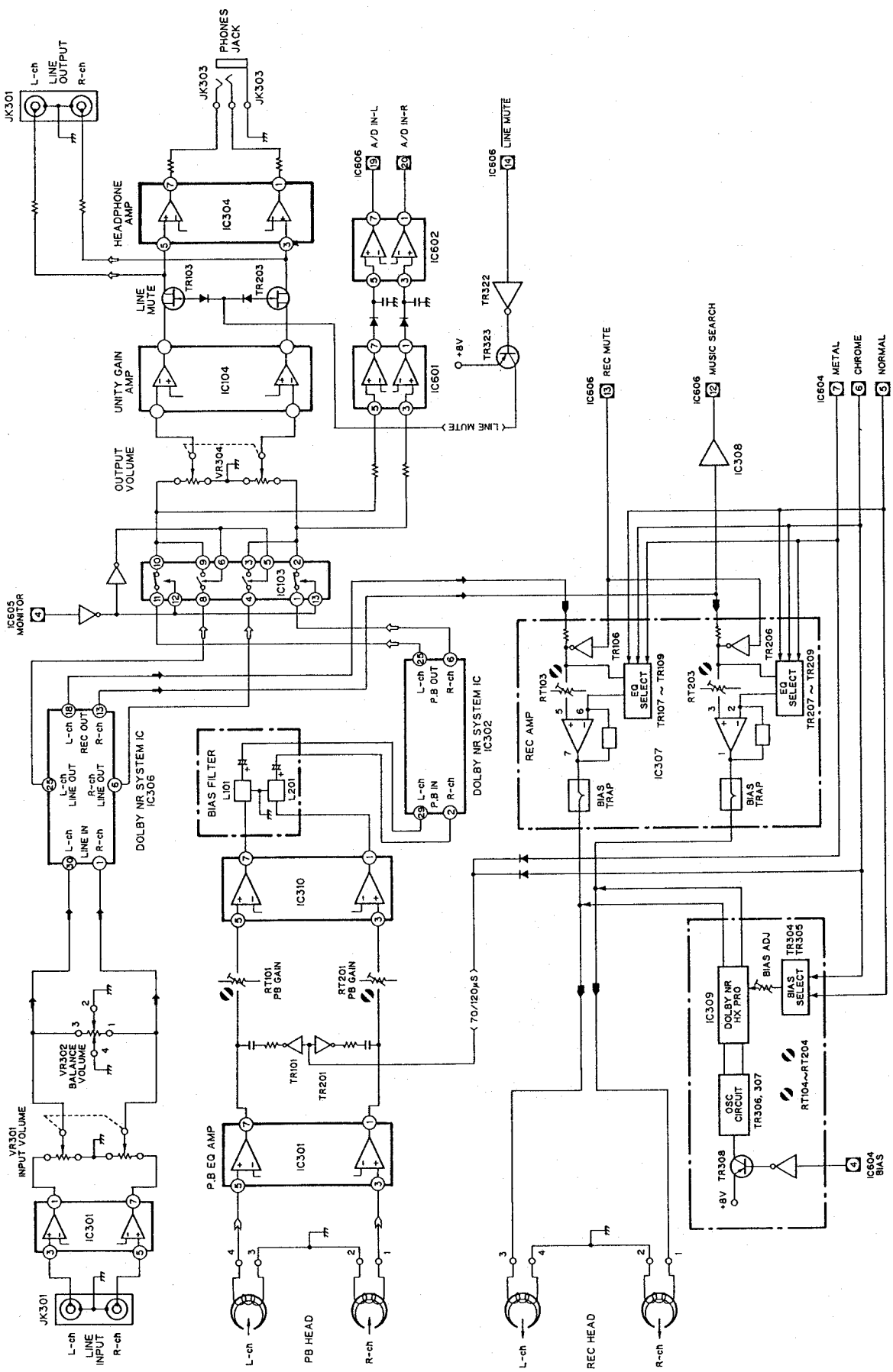

LEVEL DIAGRAM

PLAYBACK SYSTEM

TCC-130 DOLBY B-TYPE
400 Hz 200 nwb/m

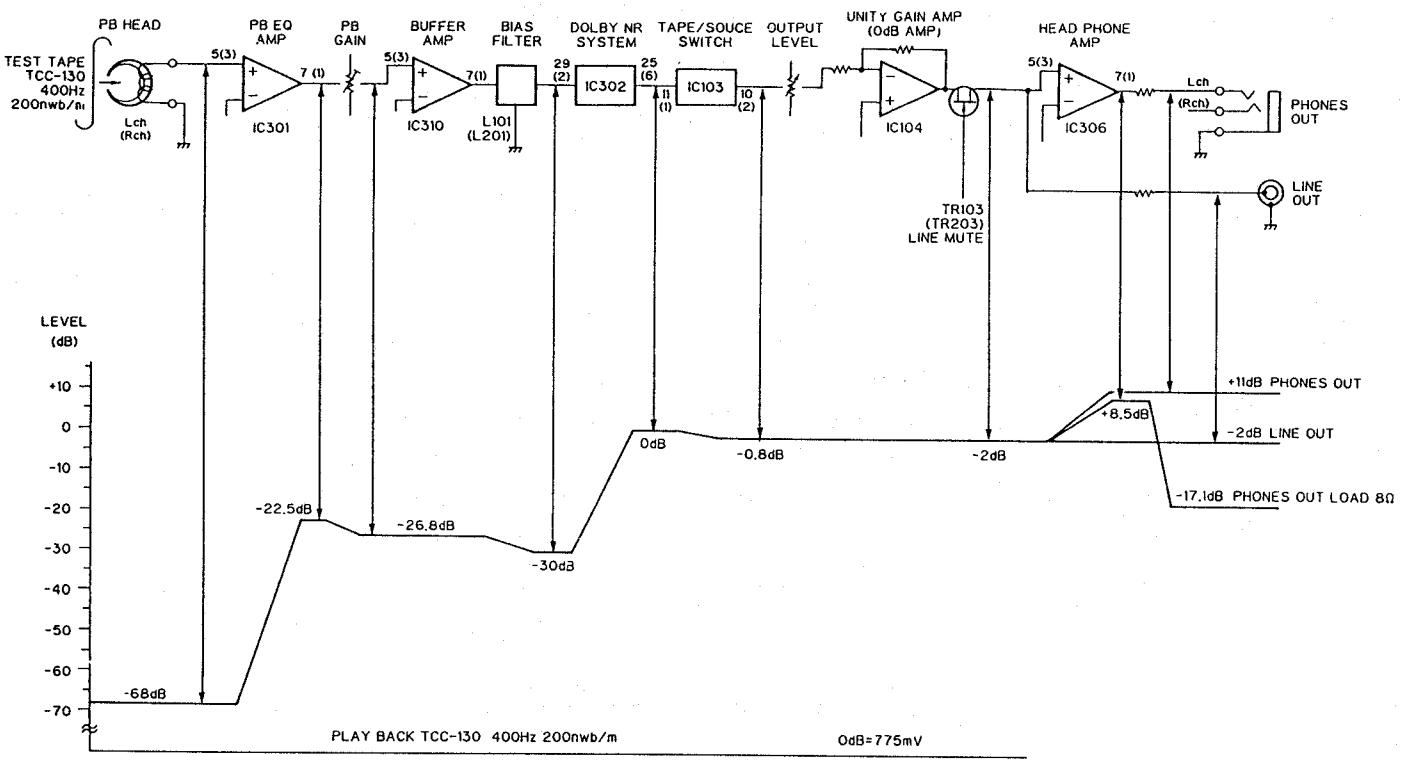

RECORDING SYSTEM

INPUT FREQUENCY
400 Hz

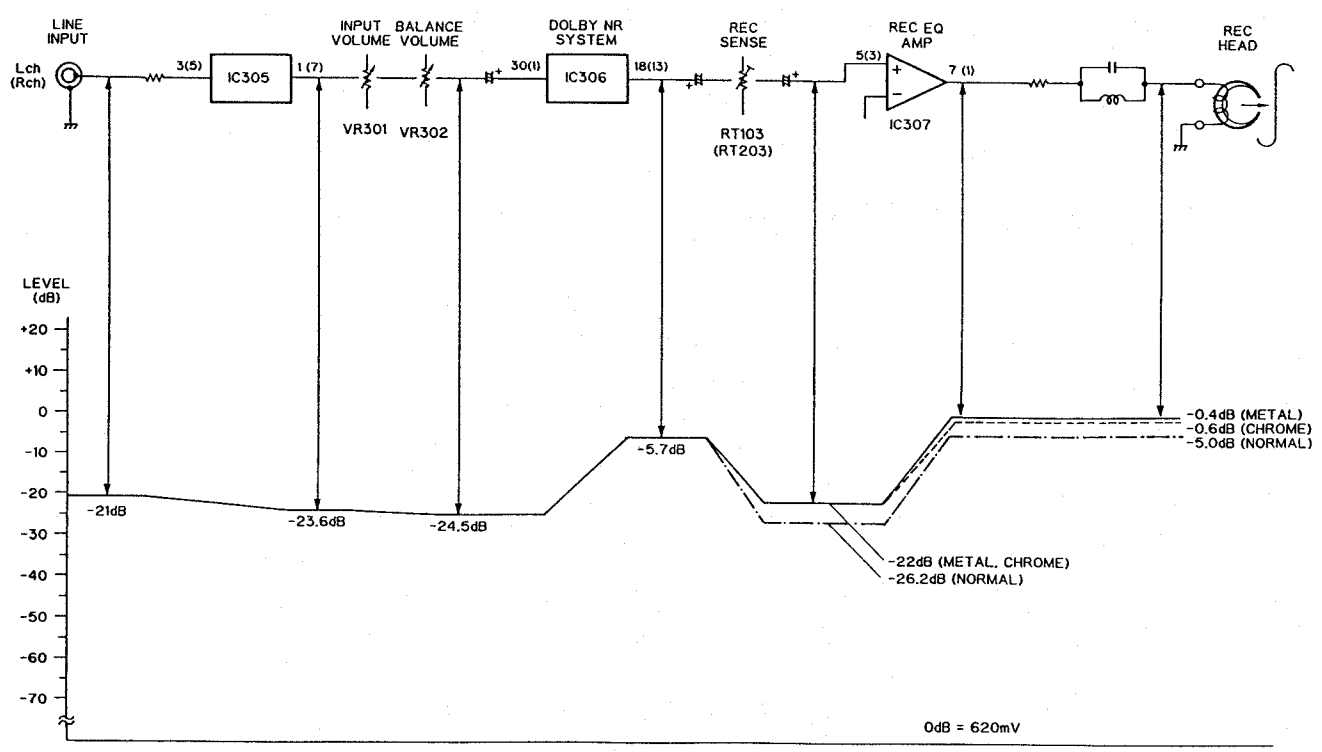

DISASSEMBLY INSTRUCTIONS

1. How to Remove the Front Panel

(1) Remove the four screws (4 × 10 CTTS-P) in the side of the top cover. Move the top cover to the rear and rise it to remove it.

(2) Press the eject knob, open the cassette box and remove the cassette window as shown in the figure.

Note: Handle the cassette window with care because it can be scratched easily.

(3) Remove the three screws (3 × 10 CBTS-P) on top of the front panel, the two hooks on the top, the three hooks on the bottom and pull the unit forward to detach it.

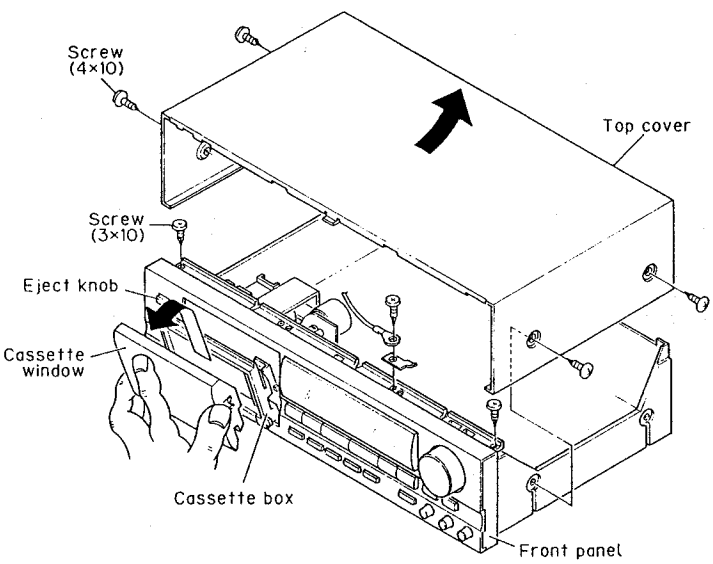

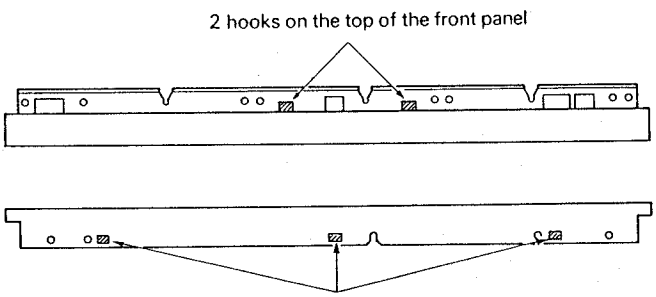

2. How to Remove the Front Escutcheon Ass'y

(1) Remove the top cover and front panel. (Refer to Step 1.)

(2) Remove the three retaining screws 3 × 10 CBTS-(P)-B holding the Front Escutcheon at the front.

(3) Disconnect all lead connectors.

C Mechanism	W151 (3P) → CN151	Audio circuit board
	W892 (9P)	
	Head wire → CN171	
	Head wire → CN172	
Meter circuit board	W141 (5P) → CN141	
	21PFFC → CB291	

(4) Remove Volume Knob and Volume Knob (C).

(5) Remove the four retaining screws (2.6 × 6 CBTS(S)-Z) (3 × 10 CBTS(P)-B) holding the Mecha Bracket.

(6) Remove the Hooks at the left and right of the front face of the Front Esc. Ass'y, and the two hooks on the bottom, Front Ass'y can be removed towards the front.

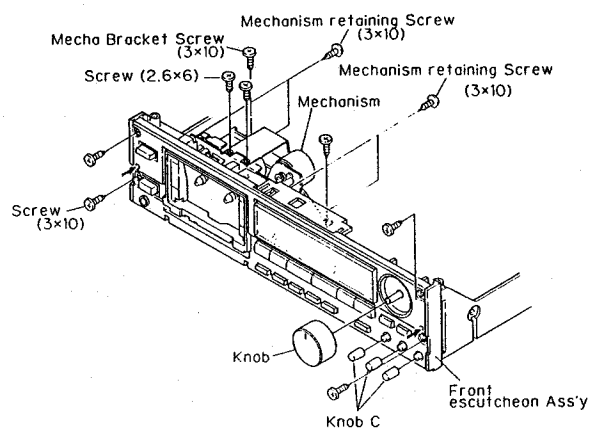

Hooks at left and right of Front Esc. Ass'y

3. How to Remove the Mechanisms

Remove the four Mechanism retaining screws 3 × 10 CBTS(P)-B and take out C Mechanism.

4. How to Remove the Meter Circuit Board

(1) Remove the top cover and the front panel. (Refer to section 1.)

(2) Remove the front esc. ass'y. (Refer to section 2.)

(3) If you remove the five binding screws (3 × 8 CBTS ·P tight) of the meter circuit board, and loosening the five hooks, the meter circuit board can be taken off.

Note: When replacing the tact switch, check to make sure that it is not floating above the circuit board. If it is floating, the switch will be in the on condition when the set is assembled.

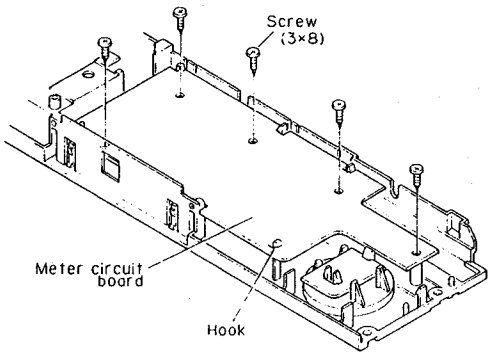

Meter Circuit Board

5. How to Remove the Cassette Door

(1) Remove the MINI DAMPER retaining screw 3 × 8 CBTS(P)-B and take out the MINI DAMPER.

(2) Hold the legs of the CASSETTE BOX folded inwards and pull up to remove the CASSETTE BOX and BOX SPRING.

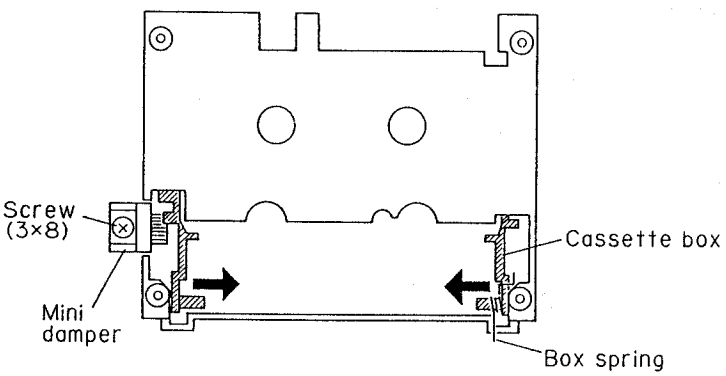

Front surface of Front Ass'y

6. How to Remove the Audio Circuit Board

(1) Remove the top cover and the front panel. (Refer to section 1.)

(2) Remove the front esc. ass'y. (Refer to section 2.)

(3) Remove the connectors from the audio circuit board and power supply circuit board.

Side of the Power supply circuit board	CN901 → (7P) → CN901 TBG CONNECTOR	Side of the audio circuit board

(4) Remove the screw (3 × 10 CBTS·P tight) (3 × 8 CBTS·S tight) that is holding down the 4P pin jack and circuit board. By removing the two catches (left and right) of the chassis holding down the circuit board in the directions of the arrows shown below, the audio circuit board can be pulled forward.

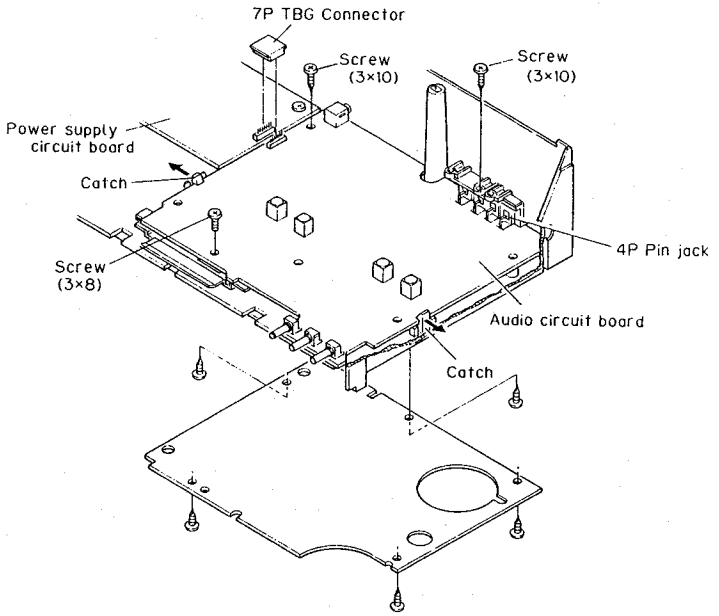

Note:
- Almost all of the service repairs to the audio circuit board can be performed by removing the bottom cover on the rear side of the chassis. Only when it is unavoidable should you refer to the removal method mentioned above.
- When reassembling, follow the procedures in the reverse order. However, if each of the various parts are not assembled properly in their respective position, the set cannot be assembled in some cases. Therefore, check the work of each step carefully when assembling.

7. How to Remove the Power Supply Circuit Board

(1) Remove the top cover and the front panel. (Refer to section 1.)

(2) Remove the bushing that is fixing the power supply cord from the chassis.

(3) When the five screws (4 × 10 CBTS·P tight) (3 × 10 CBTS·P tight) that are holding the power transformer and chicuit board are removed, the power supply circuit board can be removed by raising it.

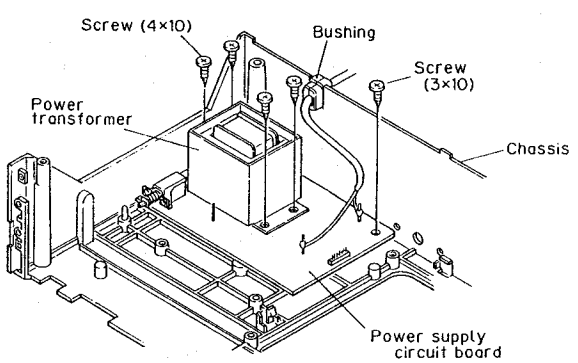

ADJUSTING AND CHECKING THE MECHANISM SECTION

1. Exchanging pinch roller

Before exchanging the pinch roller, clean the tape contact surfaces of the pinch roller and of the capstan shaft.

Defects on tape playing are primarily caused by a dirty pinch roller or capstan shaft.

The right pinch roller arm (4) can be detached by removing the washer (28). The left pinch roller arm (20) can be taken out by removing The spring (26) and the nylon nut (37).

After exchanging the pinch roller, run a tape without a C-90 butt and verify that no tape curling occurs at the tape guide and the tape guide part on the record/playback head.

Normal condition

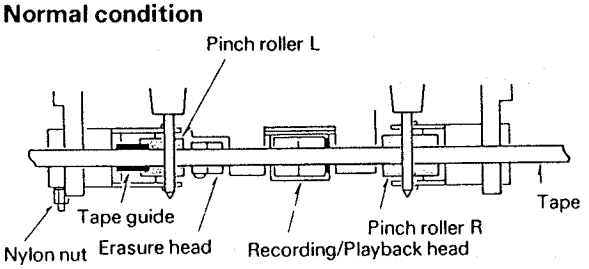

Defective running condition

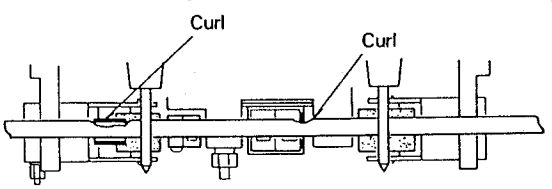

2. Verifying pinch roller crimping

In the playback condition, hook a stick type spring balance to the bracket on the central axis of the pinch roller. After pulling the pinch roller away from the capstan shaft, let the pinch roller contact the capstan shaft as it is and verify that the readings on the stick type spring balance are 250 to 350 g on the right side and 70 to 150 g on the left when the pinch roller starts turning. If the readings exceed the standard values, replace spring (26) or (4).

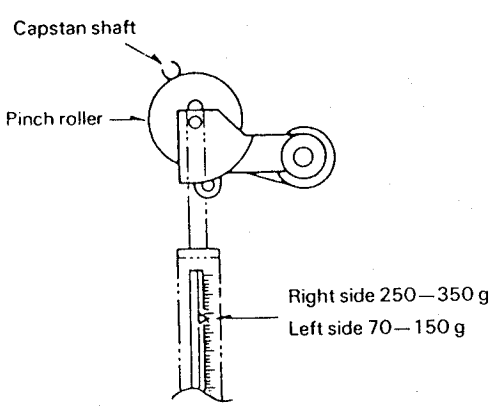

3. Exchanging recording/playback head (77)

Detach the front panel first.

3-1 Dismounting recording/playback head

(1) Detach the recording/playback head locking screw (74).

(2) Remove soldering on the head wire and separate the mechanical unit to dismount the recording/playback head.

3-2 Recording/playback head installation

Assembly is the reverse of the installation procedure described in section 3-1. The soldering for the head wire is performed as shown in Figure 3-1.

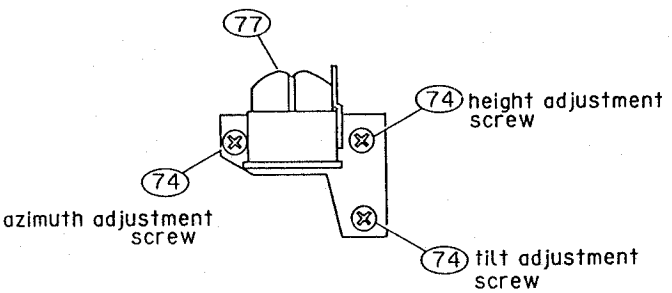

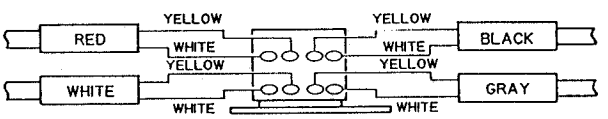

4. Recording/playback head Adjustment

4-1 Height adjustment (adjust with head adjustment jig THG-801)

(1) Set THG-801 (jig board) on the mechanical unit and perform the adjustment by turning the special height adjustment screw (74) so the 3.8 mm part on THG-801 (jig shaft) can move without touching the tape guide on the recording/playback head (77).

(2) Turn the azimuth adjusting screw (74) so that the recording/playback head does not tilt while adjusting the height, and make a rough visual adjustment.

ADJUSTING THE ELECTRICAL SECTIONS

ELECTRICAL SYSTEM ADJUSTMENT

• Gauges necessary for adjustment

(1) Low frequency oscillator (2) Variable resistance attenuator (3) Electronic voltmeter (4) Oscilloscope (5) Frequency counter (6) Adjustment driver (7) Trap coil adjustment square regulation shaft

(8) Test tape (SONY TY224)
(A-BEX TCC-153, TCC-130, TCC-262B/162B)
(DENON GR-2/60)

(9) Mirror cassette for playing (A-BEX TCC-902)

• Adjustment Notes

(1) Clean the head surface, capstan axis, pinch roller, etc. with gauze or cotton swabs soaked with alcohol before adjusting.
(2) Demagnetize the recording head and erasure head with the head eraser.
(3) Completely demagnetize the adjusting driver.
(4) Set function switches as follows unless specifically indicated.

○ MONITOR switch: TAPE
○ INPUT volume: Maximum (right side)
○ DOLBY NR switch: OFF
○ BIAS volume: Center (clicking detent in center)
○ OUT PUT volume: Maximum (right side)
○ BALANCE volume: Center (clicking detent in center)

1. Tape playing check

Load a mirror cassette for playing and examine the area around the fixed guide of the recording/playback head at playing condition with lighting and verify that the tape edge is not contacting the tape guide part. The tape playing is the most important element that determines the capacity of the entire cassette deck. Make every effort to avoid moving the adjusting part. Also, refer to "Adjustment and verification of mechanical system" for exchanging and adjusting the recording/playback head.

2. Azimuth adjustment

2-1 After verifying the tape playback, load the test tape (A-BEX TCC-153).

2-2 Playback the test tape and make any necessary adjustment by turning the azimuth adjustment nut so that A and B in the Lissajous wave figure are at the maximum and minimum levels respectively.

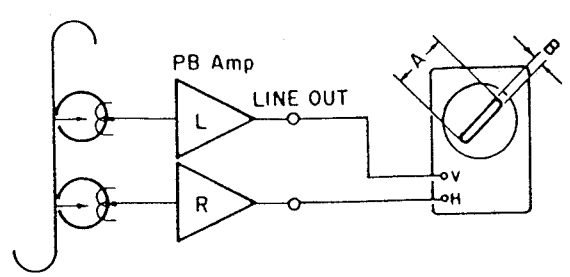

A-BEX TCC-153

3. Tape Speed Verification and Adjustment

3-1 Connect the frequency counter to the LINE OUT terminal and load a test tape (SONY TY-224)

3-2 Playback the test tape. When the test tape playback stabilizes at the center part of the tape, adjust the regulator on the back side of the capstan motor so that the frequency counter reading is set within the range of 3000 Hz ±6 Hz.

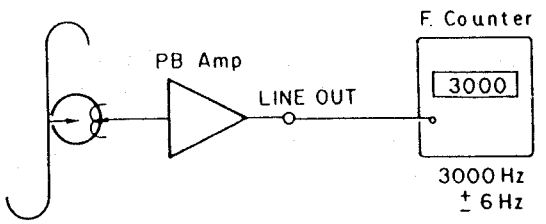

SONY TY-224

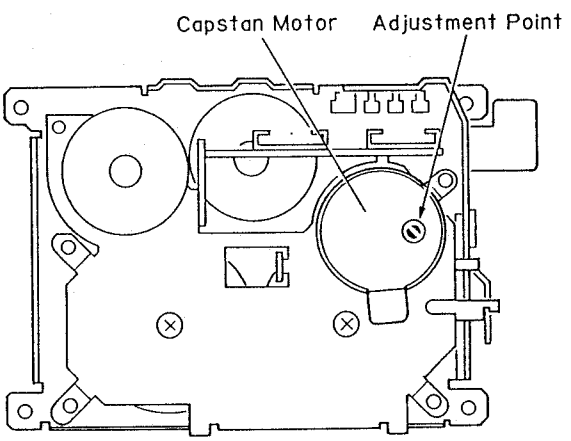

4. Playback System Adjustment

4-1 Playback level

Playback a test tape for Dolby standard level (A-BEX TCC-130). Adjust RT101 (Lch) and RT201 (Rch) so that the LINE OUT terminal level is at −2 dB (0.620 V).

4-2 Verifying playback frequency characteristics

Playback the test tape (A-BEX TCC-262B/162B) and verify that the frequency characteristics conform to the specified standard.

Note: Before checking the playback frequency response, first adjust the azimuth using the 8 kHz signal at the beginning of the test tape (A-BEX TCC-262B). Also, after checking the playback frequency, make sure to readjust the azimuth with the test tape (A-BEX TCC-153) and then lock the adjustment screw.

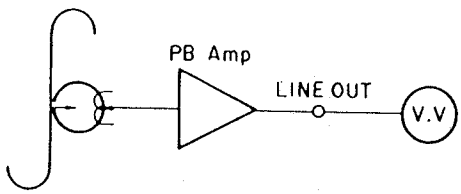

A-BEX TCC-130

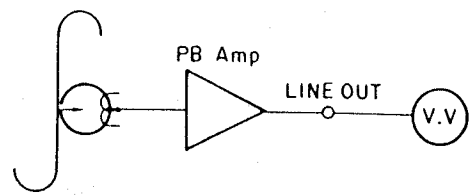

A-BEX TCC-262B/162B

Playback frequency characteristics

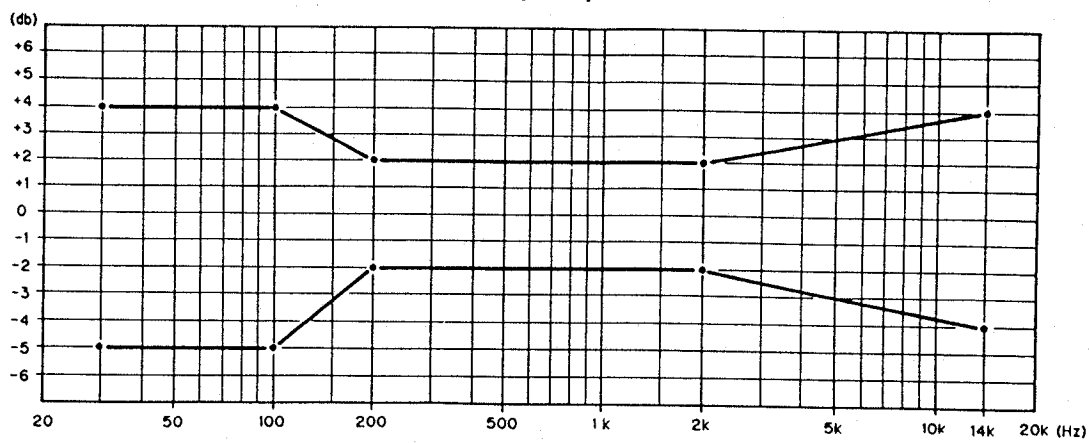

Tape: A-BEX TCC-262B/162B

4-2 Adjustment of tilt angle

(1) Set THG-801 (jig board) in the mechanical unit and place THG-801 (jig shaft) on the recording head to inspect the gap between the jig board. If the jig shaft is tilted forward, the tilt screw (74) is too tight. Loosen it slightly and adjust the tilt screw (74) until the jig stick is parallel to the jig board and the gap is completely eliminated.

(2) Readjusting the tilt may cause the height adjustment to slip. After adjusting the tilt, be sure to verify the height.
If the height is misaligned, turn the special height adjustment screw (74) and the tilt screw (74) to the same angle to shift the recording/playback head so it is parallel to the jig board for height readjustment. After the adjustment is completed, tighten the lock nuts.

4-3 Azimuth Adjustment

Playback test tape A-BEX TCC-153 and perform the adjustment by turning the azimuth adjustment screw (74) until A and B in the Lissajous wave figure are at the maximum and the minimum positions respectively. After azimuth adjustment is completed, check again to make sure there is no dislocation on the head height with the readjusting jig THG-801. After the adjustment is completed, secure the lock nuts on the adjusted parts.

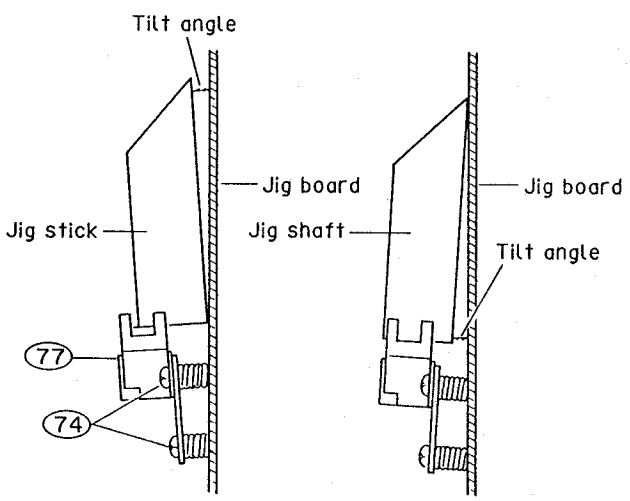

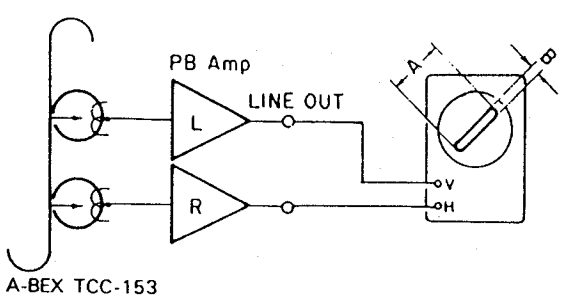

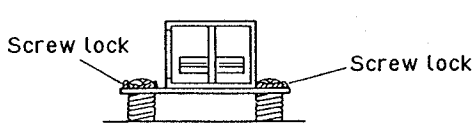

5. Erasure Head (78) Exchange

5-1 Remove the locking screw (74) for the erasure head.

5-2 Remove the solder on the head wire, and separate the mechanical unit to dismount the erasure head.

6. Tape guide height verification

Set the jig board THG-801 on the mechanical unit. Adjust it by turning the height adjustment screw (74) so that the 3.8 mm part on the jig stick THG-801 jig shaft move without contacting the tape guide part of the tape guide.

7. Verifying fast-forwarding torque

Load a cassette-type torque meter and verify that the reading on the torque meter at the median value is 30—70 g-cm during playback.

If the reading is outside the standard, verify the voltage of the reel motor (4.1 V ±0.3 V). If the voltage is low the torque is weak and when the voltage is high the torque is strong.

Also verify the reel thrusting gutter in Item 8.

8. Verification Reel Driver Thrust Movement

Verify that the thrust movement is 3.0 to 4.0 mm.

9. FF and REW Torque Verification

○ When using cassette-type torque meter:
Verify that the readings at the end of the fast-forward and rewind is 90—180 g-cm.

○ Load the cassette half-modified jig and hook the tip of a dial tension meter (full scale 100—300 g) on the triangle part. Switch to the FF (REW) position and feed a tape at a somewhat slower pace than the speed of the tape that is rolled in. Verify that the value on the dial tension meter at that time is more than 90 g-cm.

10. Back tension torque verification for recording/playback

Load a cassette-type torque meter to verify that the reading on the torque meter for recording/playback is 6 to 12 g-cm and there is no unevenness.

If the reading is outside the standard values, verify the reel thrust gutter or replace the REEL BASE BLK (82).

11. FF and REW Time Verification

Load a DENON HD-7E/60 cassette tape and verify that the FF and REW time is 80 to 110 seconds. If the reading is outside the standard values, verify Items 8 and 10.

12. Accidental erasure prevention, metal and chrome switch function verification

Verify that switch (9) is functioning normally depending on whether the hole is present or not.

5. Recording System Adjustment

5-1 Adjusting recording/playback comprehensive frequency characteristics

(1) Load a test tape DENON GR-2/60. Record with a −38 dB 1 kHz input level signal into the LINE IN terminal and playback.

(2) Make a sample recording using a 10-kHz input signal and playback this recording. Adjust RT103 (left channel) and RT203 (right channel) so that they conform to the following specified characteristics.

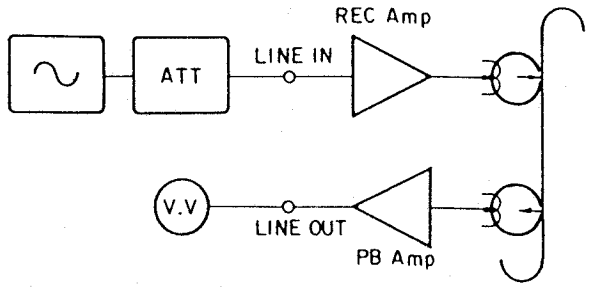

Record/Playback Overall Frequency Response

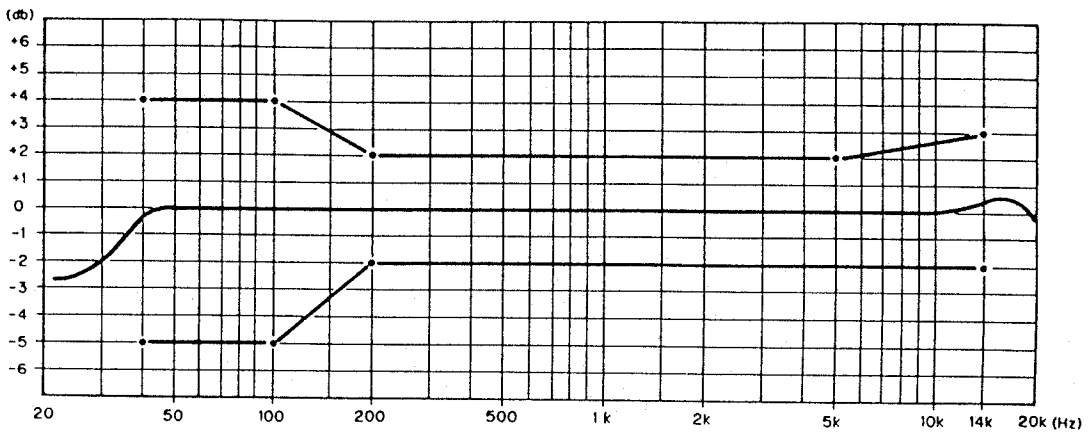

Tape: GR-2 Dolby: off
Level: −20 dB from Dolby

5-2 Recording/Playback Level Adjustment

(1) Load the test tape DENON GR-2/60. Make a sample recording with the 1 kHz (−38 dB) signal and play this section back.

(2) Adjust RT-102 (Lch) and RT-202 (Rch) so that the output from LINE OUT terminal is the same as the output at recording monitoring time.

5-3 Dolby C recording and playback comprehensive frequency characteristics verification

(1) Set the Dolby NR switch at "C" position.

(2) Use a test tape DENON GR-2/60 and record and playback as in Item 5-1 to verify that they satisfy the characteristics standards.

Dolby C Record/Playback Overall Frequency Response

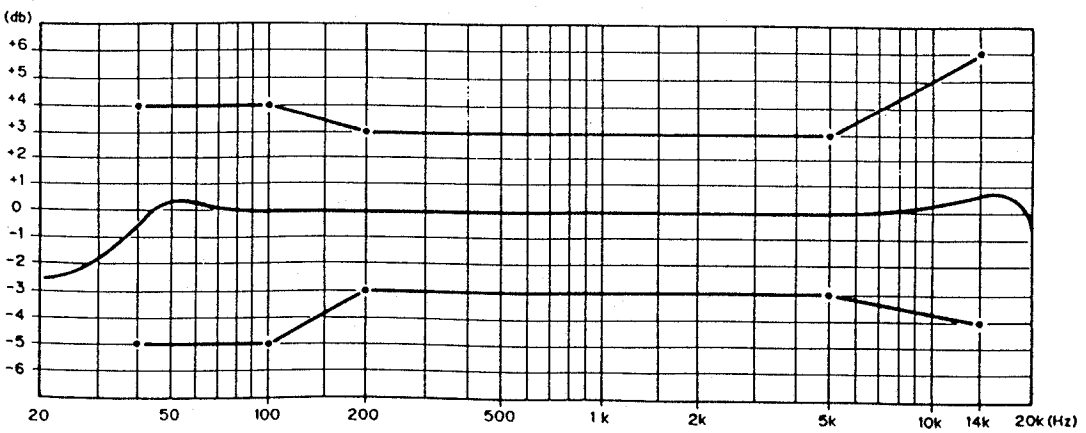

Tape: GR-2 Dolby: on. C
Level: −20 dB from Dolby

PARTS LIST OF KU-9292 AUDIO/METER UNIT

Ref. No.	Part No.	Part Name	Remarks
SEMICONDUCTORS GROUP			
IC103	262 0276 005	IC HD14066BP	
IC104	263 0424 902	IC M5218FP (TAPE)	
IC301	262 0864 006	IC UPC4570C	
IC302	263 0715 006	IC CXA1330S	
IC304	263 0711 000	IC M5218AP	
IC305	263 0565 007	IC BA15218	
IC306	263 0715 006	IC CXA1330S	
IC307, 308	263 0565 007	IC BA15218	
IC309	263 0354 001	IC UPC1297CA	
IC310	263 0565 007	IC BA15218	
IC601	263 0565 007	IC BA15218	
IC602, 603	263 0620 007	IC BA10393	
IC604, 605	262 1295 001	IC UPD4094BC	
IC606	262 1995 000	µComputer UPD75212ACW-A89	
IC609	499 0150 008	Remote Sensor SBX1610-52	
IC901	263 0810 008	IC NJM7808A (S)	
IC902	263 0503 001	IC NJM7908A	
IC903	263 0793 002	IC JM7806A (S)	
IC904, 905	262 0447 009	IC BA6109U1	
TR101, 102	273 0245 900	Transistor 2SC2603E/F T	
TR103	275 0048 912	Transistor 2SK381 (B)/(C)-T	
TR105	269 0015 908	Transistor DTC124XS (22K-47K)T	Built in Resistor
TR106	273 0245 900	Transistor 2SC2603E/F T	
TR108 ~110	269 0015 908	Transistor DTC124XS (22K-47K)T	Built in Resistor
TR111	273 0245 900	Transistor 2SC2603E/F T	
TR201, 202	273 0245 900	Transistor 2SC2603E/F T	
TR203	275 0048 912	Transistor 2SK381 (B)/(C)-T	
TR205	269 0015 908	Transistor DTC124XS (22K-47K)T	Built in Resistor
TR206	273 0245 900	Transistor 2SC2603E/F T	
TR208 ~210	269 0015 908	Transistor DTC124XS (22K-47K)T	Built in Resistor
TR211	273 0245 900	Transistor 2SC2603E/F T	
TR301	269 0019 904	Transistor DTA143XS (4.7K-10K)T	Built in Resistor
TR302	269 0062 906	Transistor DTC124ES (22K-22K)T	Built in Resistor
TR304, 305	269 0015 908	Transistor DTC124XS (22K-47K)T	Built in Resistor
TR306, 307	273 0245 900	Transistor 2SC2603E/F T	
TR308	272 0025 907	Transistor 2SB562 (C)TF	
TR311	269 0040 902	Transistor DTC144ES (47K-47K)	Built in Resistor
TR316	269 0015 908	Transistor DTC124XS (22K-47K)T	Built in Resistor
TR317	269 0040 902	Transistor DTC144ES (47K-47K)	Built in Resistor
TR321, 322	269 0018 905	Transistor DTC143ES (4.7K-4.7K)T	Built in Resistor
TR323	269 0022 904	Transistor DTA143ES (4.7K-4.7K)T	Built in Resistor
TR601	269 0112 908	Transistor DTC144WS (47K-22K)T	Built in Resistor
TR604, 605	269 0082 902	Transistor DTC144EKT96	Built in Resistor
TR850	269 0015 908	Transistor DTC124XS (22K-47K)T	Built in Resistor
TR904	272 0025 907	Transistor 2SB562 (C)TF	
TR908	269 0015 908	Transistor DTC124XS (22K-47K)T	Built in Resistor
TR909	272 0025 907	Transistor 2SB562 (C)TF	
TR910	269 0090 907	Transistor DTC143XS-T	Built in Resistor
D101, 201	276 0620 906	Diode (Chip) 1SS354TE-17	
D301, 302	276 0432 903	Diode 1SS270A	
D304, 305	276 0468 906	Zener Diode HZS9B-1TD	
D306 ~308	276 0432 903	Diode 1SS270A	
D310	276 0432 903	Diode 1SS270A	
D311	276 0468 906	Zener Diode HZS9B-1TD	
D312	276 0432 903	Diode 1SS270A	
D314,	276 0468 906	Zener Diode HZS9B-1TD	
D601	276 0432 903	Diode 1SS270A	
D605	276 0432 903	Diode 1SS270A	
D610 ~613	276 0432 903	Diode 1SS270A	
D651 ~654	276 0432 903	Diode 1SS270A	
D656 ~659	276 0432 903	Diode 1SS270A	
D661 ~666	276 0432 903	Diode 1SS270A	
D669	276 0432 903	Diode 1SS270A	
D701	276 0432 903	Diode 1SS270A	
D702	276 0432 903	Diode 1SS270A	
D707	276 0432 903	Diode 1SS270A	
D777	276 0432 903	Diode 1SS270A	
D901 ~906	276 0553 905	Diode 1SR35-200A (T93X)	
D909, 910	276 0432 903	Diode ISS270A	
D911, 912	276 0553 905	Diode 1SR35-200A (T93X)	
D914	276 0483 907	Zener Diode HZS30-1TD	
D915	276 0468 906	Zener Diode HZS9B-1TD	
D917	276 0460 904	Zener Diode HZS5C-1TD	
D918	276 0461 903	Zener Diode HZS6A-1TD	
D919	276 0466 908	Zener Diode HZS7C-1TD	
D920	276 0471 906	Zener Diode HZS11B-1TD	
D921 ~923	276 0553 905	Diode 1SR35-200A (T93X)	
RESISTORS GROUP (not included Carbon Film ±5% 1/4W type)			
VR301	211 0734 002	Valiable 5K ohm (INPUT)	V1420HFA502R
VR302	211 0735 001	Valiable 10K ohm (BALANCE)	V09V25FW103-
VR303	211 0706 001	Valiable 1K ohm (BIAS)	V09V25FB102K
VR304	211 0736 000	Valiable 10K ohm (CD CYNCRO)	V09V25FA03
RT101	211 6093 954	Adjust 22K ohm	V06PB223 T
RT103	211 6093 967	Adjust 47K ohm	V06PB473 T
RT104	211 6093 954	Adjust 22K ohm	V06PB223 T
RT201	211 6093 954	Adjust 22K ohm	V06PB223 T
RT203	211 6093 967	Adjust 47K ohm	V06PB473 T
RT204	211 6093 954	Adjust 22K ohm	V06PB223 T

Ref. No.	Part No.	Part Name	Remarks
R003, 004	247 1018 904	Chip 0 ohm	RM73B20R0KT
R009	247 1018 904	Chip 0 ohm	RM73B20R0KT
R010, 011	247 1018 904	Chip 0 ohm	RM73B20R0KT
R012, 013	247 0018 905	Chip 0 ohm	RM73B--0R0KT
R014	247 1018 904	Chip 0 ohm	RM73B20R0KT
R016	247 1018 904	Chip 0 ohm	RM73B20R0KT
R018 ~020	247 0018 905	Chip 0 ohm	RM73B--0R0KT
R022	247 1018 904	Chip 0 ohm	RM73B20R0KT
R024	247 1018 904	Chip 0 ohm	RM73B20R0KT
R025	247 0018 905	Chip 0 ohm	RM73B--0R0KT
R026, 028	247 1018 904	Chip 0 ohm	RM73B20R0KT
R101	247 0011 944	Chip 47K ohm	RM73B--473JT
R103	247 0006 920	Chip 330 ohm	RM73B--331JT
R104	247 0010 974	Chip 24K ohm	RM73B--243JT
R105	247 0013 984	Chip 470K ohm	RM73B--474JT
R112	247 0005 976	Chip 200 ohm	RM73B--201JT
R117	247 0015 940	Chip 2.2M ohm	RM73B--225JT
R120	247 0011 944	Chip 47K ohm	RM73B--473JT
R121	247 0012 927	Chip 100K ohm	RM73B--104JT
R127	247 0009 985	Chip 10K ohm	RM73B--103JT
R128	247 0005 905	Chip 100 ohm	RM73B--101JT
R131	247 0010 987	Chip 27K ohm	RM73B--273JT
R132	247 0011 944	Chip 47K ohm	RM73B--473JT
⚠ R134	247 2315 912	Carbon (Fusible) 10 ohm	RD14B2E100GFRST
R137	247 0009 943	Chip 6.8K ohm	RM73B--682JT
R153	247 0012 969	Chip 150K ohm	RM73B--154JT
R160	247 0009 927	Chip 5.6K ohm	RM73B--562JT
R161, 162	247 0010 929	Chip 15K ohm	RM73B--153JT
R164	247 0006 920	Chip 330 ohm	RM73B--331JT
R165	247 0011 902	Chip 33K ohm	RM73B--333JT
R201	247 0011 944	Chip 47K ohm	RM73B--473JT
R203	247 0006 920	Chip 330 ohm	RM73B--331JT
R204	247 0010 974	Chip 24K ohm	RM73B--243JT
R205	247 0013 984	Chip 470K ohm	RM73B--474JT
R212	247 0005 976	Chip 200 ohm	RM73B--201JT
R217	247 0015 940	Chip 2.2M ohm	RM73B--225JT
R220	247 0011 944	Chip 47K ohm	RM73B--473JT
R221	247 0012 927	Chip 100K ohm	RM73B--104JT
R227	247 0009 985	Chip 10K ohm	RM73B--103JT
R228	247 0005 905	Chip 100 ohm	RM73B--101JT
R231	247 0010 987	Chip 27K ohm	RM73B--273JT
R232	247 0011 944	Chip 47K ohm	RM73B--473JT
⚠ R234	241 2315 912	Carbon (Fusible) 10 ohm	RD14B2E100GFRST
R237	247 0009 943	Chip 6.8K ohm	RM73B--682JT
R253	247 0012 969	Chip 150K ohm	RM73B--154JT
R260	247 0009 927	Chip 5.6K ohm	RM73B--562JT
R261, 262	247 0010 929	Chip 15K ohm	RM73B--153JT
R264	247 0006 920	Chip 330 ohm	RM73B--331JT
R265	247 0011 902	Chip 33K ohm	RM73B--333JT
R308	247 0011 944	Chip 47K ohm	RM73B--473JT
R314	247 0008 915	Chip 2K ohm	RM73B--202JT
R320	247 0012 927	Chip 100K ohm	RM73B--104JT
R321	247 0006 962	Chip 470 ohm	RM73B--471JT
R322	247 0012 927	Chip 100K ohm	RM73B--104JT
R323	247 0004 922	Chip 47 ohm	RM73B--470JT
R324	247 0011 960	Chip 56K ohm	RM73B--563JT
R325	247 0012 901	Chip 82K ohm	RM73B--823JT
R326	247 0010 987	Chip 27K ohm	RM73B--273JT
R327	247 0009 927	Chip 5.6K ohm	RM73B--562JT

Ref. No.	Part No.	Part Name	Remarks
R328, 329	247 0009 985	Chip 10K ohm	RM73B--103JT
R331, 332	247 0012 943	Chip 120K ohm	RM73B--124JT
⚠ R333, 334	241 2315 925	Carbon (Fusible) 22 ohm	RD14B2E220GFRST
R338	247 0009 985	Chip 10K ohm	RM73B--103JT
R339	247 0014 967	Chip 1M ohm	RM73B--105JT
R341	247 0008 928	Chip 2.2K ohm	RM73B--222JT
R347	247 1009 984	Chip 10K ohm	RM73B2B103JT
R348	247 0094 985	Chip 10K ohm	RM73B--103JT
R601, 602	247 0010 987	Chip 27K ohm	RM73B--273JT
R603	247 0011 986	Chip 68K ohm	RM73B--683JT
R604	247 0005 905	Chip 100 ohm	RM73B--101JT
R605	247 0014 967	Chip 1M ohm	RM73B--105JT
R608 ~615	247 0012 998	Chip 200K ohm	RM73B--204JT
R616	247 0011 944	Chip 47K ohm	RM73B--473JT
R617	247 0012 927	Chip 100K ohm	RM73B--104JT
R618 ~623	247 0012 927	Chip 100K ohm	RM73B--104JT
R624	247 1009 984	Chip 10K ohm	RM73B2B103JT
R625	247 0009 985	Chip 10K ohm	RM73B--103JT
R626	247 0008 928	Chip 2.2K ohm	RM73B--222JT
R631 ~635	247 0009 985	Chip 10K ohm	RM73B--103JT
R636, 637	247 0011 902	Chip 33K ohm	RM73B--333JT
R638	247 0009 985	Chip 10K ohm	RM73B--103JT
R640	247 1009 984	Chip 10K ohm	RM73B2B103JT
R643, 644	247 1009 984	Chip 10K ohm	RM73B2B103JT
R645, 646	247 0007 945	Chip 1K ohm	RM73B--102JT
R648, 649	247 0009 985	Chip 10K ohm	RM73B--103JT
R701, 702	247 0010 987	Chip 27K ohm	RM73B--273JT
R703	247 0011 986	Chip 68K ohm	RM73B--683JT
R704	247 0005 905	Chip 100 ohm	RM73B--101JT
R705	247 0014 967	Chip 1M ohm	RM73B--105JT
R720	247 0013 900	Chip 220K ohm	RM73B--224JT
R721	247 0011 915	Chip 36K ohm	RM73B--363JT
R722, 723	247 0011 957	Chip 51K ohm	RM73B--513JT
R724, 725	247 0014 925	Chip 680K ohm	RM73B--684JT
R726, 727	247 0013 900	Chip 220K ohm	RM73B--224JT
R728, 729	247 0009 985	Chip 10K ohm	RM73B--103JT
R910	247 0012 927	Chip 100K ohm	RM73B--104JT
R912 ~915	247 0006 962	Chip 470 ohm	RM73B--471JT
R916	247 0007 987	Chip 1.5K ohm	RM73B--152JT
⚠ R917	244 0077 028	Metal oxide film 18 ohm 2W (Non-buring type)	RS14B3D180JNBF
⚠ R920	241 2315 912	Carbon (Fusible) 10 ohm	RD14B2E100GFRST

CAPACITORS GROUP

C101	257 0004 987	Chip (Ceramic) 120pF/50V	CC73SL1H121JT
C102	255 1209 905	Film 0.0056μF/50V	CQ93M1H562JT
C103	254 3056 917	Electrolytic 1μF/50V (Bipolar)	CE04D1H010MBPT SME

Ref. No.	Part No.	Part Name	Remarks
C104	255 1217 900	Film 0.027μF/50V	CQ93M1H273JT
C106	254 4260 948	Electrolytic 1μF/50V	CE04W1H010MT SME
C110, 111	255 1204 900	Film 0.0022μF/50V	CQ93M1H222JT
C112	254 4278 943	Electrolytic 0.56μF/50V	CE04W1HR56MT SME
C113	254 4260 922	Electrolytic 0.33μF/50V	CE04W1HR33MT SME
C114	254 4254 909	Electrolytic 10μF/16V	CE04W1C100MT SME
C115	254 4260 951	Electrolytic 2.2μF/50V	CE04W1H2R2MT SME
C116	254 4260 948	Electrolytic 1μF/50V	CE04W1H010MT SME
C117	253 1179 945	Ceramic 220pF/50V	CK45B1H221KT DD-3
C123	254 4261 918	Electrolytic 47μF/50V	CE04W1H470MT SME
C124	254 4260 948	Electrolytic 1μF/50V	CE04W1H010MT SME
C125	253 9031 962	Ceramic 0.0027μF/25V	CK45=1E272KT
C126, 127	255 1204 900	Film 0.0022μF/50V	CQ93M1H222JT
C226, 227	255 1204 900	Film 0.0022μF/50V	CQ93M1H222JT
C128	254 4278 943	Electrolytic 0.56μF/50V	CE04W1HR56MT SME
C129	254 4260 922	Electrolytic 0.33μF/50V	CE04W1HR33MT SME
C130	254 4254 909	Electrolytic 10μF/16V	CE04W1C100MT SME
C131	254 4254 909	Electrolytic 10μF/16V	CE04W1C100MT SME
C132	253 9030 947	Ceramic 0.0047μF/25V	CK45=1E472KT
C133	254 4258 905	Electrolytic 4.7μF/35V	CE04W1V4R7MT SME
C134	254 4252 901	Electrolytic 22μF/10V	CE04W1A220MT SME
C135	256 1034 953	Merallized 0.068μF/50V	CF93A1H683JT
C136	253 9030 921	Ceramic 0.0022μF/25V	CK45=1E222KT
C137	257 0005 902	Chip (Ceramic) 150pF/50V	CC73SL1H151JT
C138	253 9031 991	Ceramic 0.0082μF/25V	CK45=1E822KT
C139	253 9030 934	Ceramic 0.0033μF/25V	CK45=1E332KT
C141	257 1010 970	Chip (Ceramic) 0.0056μF/50V	CK73B1H562KT
C142	257 0004 961	Chip (Ceramic) 100pF/50V	CC73SL1H101JT
⚠ C143	253 1131 909	Ceramic 390pF/500V	CK45B2H391KT
C144	257 0006 985	Chip (Ceramic) 820pF/50V	CC73SL1H821JT
C145	257 0010 900	Chip (Ceramic) 0.01μF/50V	CK73B1H103KT
C146	257 0010 939	Chip (Ceramic) 0.018μF/50V	CK73B1H183KT
C147	257 0010 942	Chip (Ceramic) 0.002μF/25V	CK73B1H223KT
C148	257 0004 961	Chip (Ceramic) 120pF/50V	CC73SL1H101JT
C149	257 0005 928	Chip (Ceramic) 180pF/50V	CC73SL1H181JT
C201	257 0004 987	Chip (Ceramic) 120pF/50V	CC73SL1H121JT
C202	255 1209 905	Film 0.0056μF/50V	CQ93M1H562JT
C203	254 3056 917	Electrolytic 1μF/50V (Bipolar)	CE04D1H010MBPT SME
C204	255 1217 900	Film 0.027μF/50V	CQ93M1H273JT
C206	254 4260 948	Electrolytic 1μF/50V	CE04W1H010MT SME
C210, 211	255 1204 900	Film 0.0022μF/50V	CQ93M1H222JT
C212	254 4278 943	Electrolytic 0.56μF/50V	CE04W1HR56MT SME
C213	254 4260 922	Electrolytic 0.33μF/50V	CE04W1HR33MT SME
C214	254 4254 909	Electrolytic 10μF/16V	CE04W1C100MT SME
C215	254 4260 951	Electrolytic 2.2μF/50V	CE04W1H2R2MT SME
C216	254 4260 948	Electrolytic 1μF/50V	CE04W1H010MT SME

Ref. No.	Part No.	Part Name	Remarks
C217	253 1179 945	Ceramic 220pF/50V	CK45B1H221KT DD-3
C223	254 4261 918	Electrolytic 47μF/50V	CE04W1H470MT SME
C224	254 4260 948	Electrolytic 1μF/50V	CE04W1H010MT SME
C225	253 9031 962	Ceramic 0.0027μF/25V	CK45=1E272KT
C228	254 4278 943	Electrolytic 0.56μF/50V	CE04W1HR56MT SME
C229	254 4260 922	Electrolytic 0.33μF/50V	CE04W1HR33MT SME
C230	254 4254 909	Electrolytic 10μF/16V	CE04W1C100MT SME
C231	254 4254 909	Electrolytic 10μF/16V	CE04W1C100MT SME
C232	253 9030 947	Ceramic 0.0047μF/25V	CK45=1E472KT
C233	254 4258 905	Electrolytic 4.7μF/35V	CE04W1V4R7MT SME
C234	254 4252 901	Electrolytic 22μF/10V	CE04W1A220MT SME
C235	256 1034 953	Metallized 0.068μF/50V	CF93A1H683JT
C236	253 9030 921	Ceramic 0.0022μF/25V	CK45=1E222KT
C237	257 0005 902	Chip (Ceramic) 150pF/50V	CC73SL1H151JT
C238	253 9031 991	Ceramic 0.0082μF/25V	CK45=1E822KT
C239	253 9030 934	Ceramic 0.0033μF/25V	CK45=1E332KT
C241	257 0009 979	Chip (Ceramic) 0.0056μF/50V	CK73B1H562KT
C242	257 0004 961	Chip (Ceramic) 100pF/50V	CC73SL1H101JT
⚠ C243	253 1131 909	Ceramic 390pF/500V	CK45B2H391KT
C244	257 0006 985	Chip (Ceramic) 820pF/50V	CC73SL1H821JT
C245	257 0010 900	Chip (Ceramic) 0.01μF/50V	CK73B1H103KT
C246	257 0010 939	Chip (Ceramic) 0.018μF/50V	CK73B1H183KT
C247	257 0010 942	Chip (Ceramic) 0.022μF/25V	CK73B1E223KT
C248	257 0004 961	Chip (Ceramic) 120pF/50V	CC73SL1H101JT
C249	257 0005 928	Chip (Ceramic) 180pF/50V	CC73SL1H181JT
C301	254 4252 969	Electrolytic 470μF/10V	CE04W1A471MT SME
C302	254 4252 969	Electrolytic 470μF/10V	CE04W1A471MT SME
C303, 304	254 4254 909	Electrolytic 10μF/16V	CE04W1C100MT SME
C305	254 4260 951	Electrolytic 2.2μF/50V	CE04W1H2R2MT SME
C307	257 0009 940	Chip (Ceramic) 0.0033μF/50V	CK73B1H332KT
C308	254 4252 901	Electrolytic 22μF/10V	CE04W1A220MT SME
C309	257 0010 942	Chip (Ceramic) 0.022μF/25V	CK73B1E223KT
C311	257 0009 966	Chip (Ceramic) 0.0047μF/50V	CK73B1H472KT
C312, 313	254 4254 909	Electrolytic 10μF/16V	CE04W1C100MT SME
C314	253 9031 904	Ceramic 0.047μF/25V	CK45=1E473KT
C315	253 4535 942	Ceramic 4pF/50V	CC45SL1H040CT DD-3
C316	254 4254 909	Electrolytic 10μF/16V	CE04W1C100MT SME
C317	254 4252 927	Electrolytic 47μF/10V	CE04W1A470MT SME

Ref. No.	Part No.	Part Name	Remarks
C320	253 9031 917	Ceramic 0.068μF/25V	CK45=1E683KT
C321	255 4120 900	Film 0.0068μF/100V	CQ93P2A682JT
C324	254 4256 949	Electrolytic 100μF/25V	CE04W1E101MT SME
C326, 327	254 4254 909	Electrolytic 10μF/16V	CE04W1C100MT SME
C330	257 0010 900	Chip (Ceramic) 0.01μF/50V	CK73B1H103KT
C331	257 0009 995	Chip (Ceramic) 0.0082μF/50V	CK73B1H822KT
C332, 333	257 0009 940	Chip (Ceramic) 0.0033μF/50V	CK73B1H332KT
C334, 335,	257 0014 935	Chip (Ceramic) 0.1μF/25V	CK73F1E104ZT
C336	257 0008 983	Chip (Ceramic) 0.001μF/50V	CK73B1H102KT
C341	257 0010 942	Chip (Ceramic) 0.022μF/25V	CK73B1E223KT
C342	257 0009 924	Chip (Ceramic) 0.0022μF/50V	CK73B1H222KT
C343	257 0010 900	Chip (Ceramic) 0.01μF/50V	CK73B1H103KT
C601	254 4260 964	Electrolytic 3.3μF/50V	CE04W1H3R3MT SME
C602, 603	257 0008 983	Chip (Ceramic) 0.001μF/50V	CK73B1H102KT
C610	254 4260 951	Electrolytic 2.2μF/50V	CE04W1H2R2MT SME
C620	253 9031 917	Ceramic 0.068μF/25V	CK45=1E683KT
C622	253 9031 917	Ceramic 0.068μF/25V	CK45=1E683KT
C623	253 9031 917	Ceramic 0.068μF/25V	CK45=1E683KT
C625	254 4260 948	Electrolytic 1μF/50V	CE04W1H010MT SME
C632 ~639	257 0008 983	Chip (Ceramic) 0.001μF/50V	CK73B1H102KT
C640	257 0008 983	Chip (Ceramic) 0.001μF/50V	CK73B1H102KT
C701	254 4260 964	Electrolytic 3.3μF/50V	CE04W1H3R3MT SME
C799	254 4256 907	Electrolytic 10μF/25V	CE04W1E100MT SME
C850	254 4254 909	Electrolytic 10μF/16V	CE04W1C100MT SME
C900	254 4403 721	Electrolytic 2200μF/25V	CE04W1E222MC SMG
C901, 902	254 4403 718	Electrolytic 1000μF/25V	CE04W1E102MC SMG
C903	254 4403 721	Electrolytic 2200μF/25V	CE04W1E222MC SMG
C904, 905	254 4252 930	Electrolytic 100μF/10V	CE04W1A101MT SME
C907	254 4414 707	Electrolytic 470μF/50V	CE04W1A471MC SMG
C908	254 4258 947	Electrolytic 47μF/35V	CE04W1V470MT SME
C909	254 4252 927	Electrolytic 47μF/10V	CE04W1A470MT SME
C910	254 4258 947	Electrolytic 47μF/35V	CE04W1V470MT SME
C911	254 4256 952	Electrolytic 220μF/25V	CE04W1E221MT SME
C912	254 4260 951	Electrolytic 2.2μF/50V	CE04W1H2R2MT SME
C915	257 0010 900	Chip (Ceramic) 0.01μF/50V	CK73B1H103KT
C917	257 0010 900	Chip (Ceramic) 0.01μF/50V	CK73B1H103KT

Ref. No.	Part No.	Part Name	Remarks
C918	257 0010 942	Chip (Ceramic) 0.022μF/25V	CK73B1E223KT
C919	257 0010 900	Chip (Ceramic) 0.01μF/50V	CK73B1H103KT
C920	254 4255 717	Electrolytic 4700μF/16V	CE04W1C472MC SME
C921	259 0007 715	Electrolytic 4700μF/5.5V	SB CAP==472=C
OTHER PARTS			
FL601	393 4128 000	FL Tube	FIP6BCM6
JK301	204 8261 003	4P Pin Jack	
JK303	204 8264 026	Head Phone Jack	
JK304	204 8416 007	Mini Jack	
L101	231 0825 009	:Bias Filter	
L102	232 0109 003	:MPX Filter	
L103	235 0020 945	Inductor 153JT	
L104	235 0020 903	Inductor 682JT	
L105	239 0010 009	:HX Step up coil	
L201	231 0825 009	:Bias Filter	
L202	232 0109 003	:MPX Filter	
L203	235 0020 945	Inductor 153JT	
L204	235 0020 903	Inductor 682JT	
L205	239 0010 009	:HX Step up coil	
L301	231 0078 005	:Oscilleator Coil	
SW651 ~654	212 4388 907	Tact Switch	
SW656 ~659	212 4388 907	Tact Switch	
SW661 ~666	212 4388 907	Tact Switch	
XT601	399 0107 007	Ceramic Resonator	CTS4.19MGW
CB291	205 0491 049	21P FFC Connector Base	Meter
CN141	205 0343 058	5P Connector Base (KR-PH)	Input VR
CN151	205 0343 032	3P Connector Base (KR-PH)	H/P Jack
CN171	205 0343 061	6P Connector Base (KR-PH)	Motor R/E Head
CN172	205 0343 045	4P Connector Base (KR-PH)	PB Head
CN691	205 0491 049	21P FFC Connector Base	
CN901	205 0711 075	7P TBG Connector Base	Power
W141	203 8207 006	5P KR-DA Connector Cord	
W151	203 4753 046	3P KR-DA Connector Cord	H/P Jack
W601	204 2257 071	9P KR-DA Connector Cord	
W892	204 2257 068	9P KR-DA Connector Cord	

WARNING:

- Parts marked with ⚠ and/shading have special characteristics important to sefty.
  Be sure to use the specified parts for replacement.

PARTS LIST OF 3U-2337 POWER SUPPLY UNIT

Ref. No.	Part No.	Part Name	Remarks
SW001	212 0286 003	POWER SWITCH	
C001	253 8014 702	Ceramic CAPACITOR 0.01 μ/AC400V	CK45F2GAC103MC
CN901	205 0711 075	7P TBG CONN.BASE	
⚠	233 5756 001	POWER TRANS.	Europe, U.K., Australia
⚠	233 5758 009	POWER TRANS.	U.S.A., Canada
⚠	233 5760 000	POWER TRANS.	Multiple Voltage (Asia)
⚠	212 4698 008	VOLTAGE SELECTOR	Multiple Voltage (Asia) Only

PARTS LIST OF PACKING & ACCESSORIES

Ref. No.	Part No.	Part Name	Remarks	Q'ty
	504 0092 060	STYRENE PAPER	For AC ORD	1
	505 0131 050	CABINET COVER		1
	503 0704 106	PACKING ASS'Y		1
	503 9260 007	CUSHION	Australia, U.K., Only	2
	502 9130 008	PAD ASS'Y	Australia, U.K., Only	1
	501 9254 046	CARTON CASE		1
	513 9111 001	COLOR LABEL (GOLD)	(Gold) Only	1
	505 0038 030	PORY COVER		1
	511 9371 007	INST. MANUAL	Europe, U.K., Australia	1
	511 9370 008	INST. MANUAL	U.S.A., Canada, Multiple Voltage (Asia)	1
	511 9372 006	INST. MANUAL	Asia Only	1
	203 2360 004	2P PIN CORD		2
	203 5013 002	3P MINI PLUG CORD		1
	515 0455 005	TAPE CATALOG (E2)	Europe, U.S.A. Only	1
⚠	203 3667 007	PLUG ADAPTER	Multiple Voltage (Asia) Only	1

PARTS LIST OF EXPLODED VIEW

Ref. No.	Part No.	Part Name	Remarks
⊙ 1	411 9124 006	CHASSIS	
⊙	411 9124 022	CHASSIS	(Gold)
⊙ 2	412 2523 102	EARTH BRACKET	
⊙ 3	105 0787 107	BOTTOM COVER	
4	338 9024 005	CASSETTE MECHA. (CMAH)	
⚠ 5	233 5985 005	POWER TRANS.	Europe, U.K., Australia
⚠	233 5758 009	POWER TRANS.	U.S.A., Canada
⚠	233 5760 000	POWER TRANS.	Multiple Voltage (Asia)
⚠ 6	212 0286 003	POWER SWITCH	SW001
⚠ 7	206 2063 009	AC CORD WITH PLUG	Europe
⚠	206 2127 000	AC CORD WITH LABEL	U.K.
⚠	206 2060 002	AC CORD	U.S.A., Canada
⚠	206 2122 005	AC CORD	Australia
⚠	200 6031 026	AC CORD	Multiple Voltage (Asia)
⚠ 8	445 0056 008	CORD BUSH	
⊙ 9	412 2008 012	BUSHING PLATE	
⊙ 10	412 3401 003	MECHA. BRACKET	
⊙ 11	414 0637 009	SHIELD LABEL	
12	104 0208 201	FOOT ASS'Y	
⊙ 13	KU- 9292	AUDIO/METER P.W.B. UNIT	
13-1		AUDIO P.W.B.	
13-2		METER P.W.B.	
13-3		H/P JACK P.W.B.	
13-4		INPUT VOL. P.W.B.	
⊙ 14	3U- 2337	POWER TRANS. P.W.B. UNIT	
15	205 0712 074	7P TBG-S CONNECTOR	
16	204 8261 003	4P PIN JACK	JK301
17	204 8416 007	MINI JACK	
23	393	FL TUBE	
25	431 0310 004	POWER SW. LEVER ASS'Y	
	431 0310 020	POWER SW. LEVER ASS'Y	(Gold)
26	113 1481 306	PUSH KNOB (B)	
	113 1481 322	PUSH KNOB (B)	(Gold)
27	113 1436 335	FUNCTION KEY	
	113 1436 351	FUNCTION KEY	(Gold)
28	113 1480 200	PUSH KNOB (A)	
	113 1480 226	PUSH KNOB (A)	(Gold)
29	113 1438 003	EJECT KNOB	
	113 1438 029	EJECT KNOB	(Gold)
30	112 0515 131	VOL. KNOB	
	112 0515 144	VOL. KNOB	(Gold)
31	112 0727 000	VOL. KNOB (C)	
	112 0727 013	VOL. KNOB (C)	(Gold)
⊙ 33	103 9194 009	FRONT ESC. ASS'Y	
⊙	103 9194 012	FRONT ESC. ASS'Y	(Gold)
⊙ 34	144 9195 009	FRONT PANEL	
⊙	144 9195 012	FRONT PANEL	(Gold)
35	103 1511 305	CASSETTE BOX	
36	463 0655 009	CASSETTE SPRING	
37	463 0659 005	BOX SPRING (R)	
38	103 9195 008	CASSETTE WINDOW (A) ASS'Y	
	103 9195 011	CASSETTE WINDOW (A) ASS'Y	(Gold)
39	421 9007 007	MINI DAMPER	
⊙ 40	414 0595 015	EARTH PLATE	
⊙ 41	203 0325 067	1P CONTACT ASS'Y	

Ref. No.	Part No.	Part Name	Remarks
⊙ 45	102 0434 406	TOP COVER	
⊙	102 0434 419	TOP COVER	(Gold)
101	473 7508 017	3×10 CBTS (P)-B	
102	477 0262 006	SPECIAL SCREW	
103	473 7502 013	4×10 CBTS (P)-Z	
104	473 7503 038	4×10 CTTS (P)-BK	
	473 7503 041	4×10 CTTS (P)-NI	(Gold)
105	473 7500 044	3×8 CBTS (P)-B	
106	473 7002 018	3×8 CBTS (S)-Z	
107	473 7001 035	2.6×6 CBTS (S)-Z	

WARNING:

- Parts marked with ⚠ and/or shading have special characteristics important to safety.
  Be sure to use the specified parts for replacement.
- (Gold) in the Remarks column refers with gold front panels.
- Part indicated with the mark ⊙ are not always in stock and possibly to take a long period of time for supplying, or in some case supplying of part may be refused.

DENON

Hi-Fi Component

SUPPLMENT For □□□76□□□□□

SERVICE MANUAL
MODEL DRM-740
STEREO CASSETTE TAPE DECK

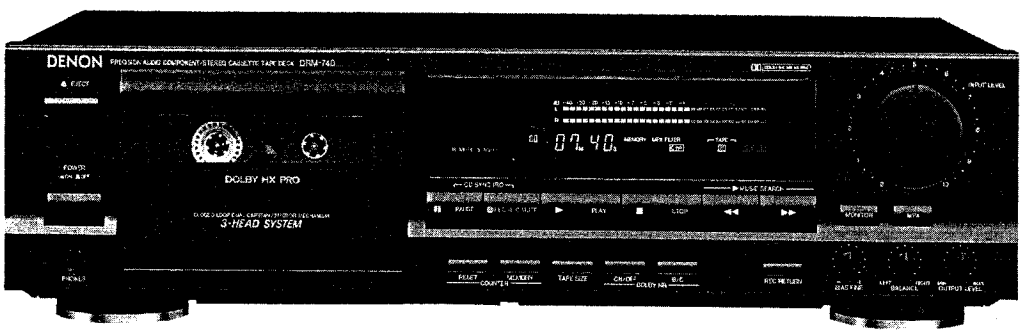

Please use this Supplement when repairing or adjusting products whose serials numbers (on the rear panel) have "76" as the 4th and 5th digits. (□□□ 76 □□□□□)

Since this Supplement contains only those pages which differ from the previously issued DRM-740 Service Manual (back page No. 0419), the Supplement should be used together with the DRM-740 Service Manual whenever repairs and adjustments are being carried out.

— TABLE OF CONTENTS —

PARTS LIST OF KU-9299 DISPLAY UNIT 2
PARTS LIST OF KU-9300 AUDIO1 UNIT ..... 2~3
PARTS LIST OF KU-9301 AUDIO2 UNIT ..... 3~4
PARTS LIST OF KU-9311 POWER UNIT 4
PARTS LIST OF PACKING & ACCESSORIES 5
P.W.BOARD OF KU-9299 DISPLAY UNIT 8
P.W.BOARD OF KU-9300 AUDIO1 UNIT 9
P.W.BOARD OF KU-9301 AUDIO2 UNIT 10
P.W.BOARD OF KU-9311 POWER UNIT 11
PARTS LIST OF EXPLODED VIEW 6
EXPLODED VIEW 7
BUNDLE DIAGRAM 11
WIRING DIAGRAM 12
SCHEMATIC DIAGRAM 13

NIPPON COLUMBIA CO., LTD.

PARTS LIST OF KU-9299 DISPLAY UNIT

Ref. No	Part No.	Part Name	Remarks
SEMICONDUCTORS GROUP			
IC602, 603	263 0620 007	IC BA10393	
IC606	262 1995 000	μ-Computer UPD75212ACW-A89	
IC609	499 0150 008	Remote Sensor SBX1610-52	
TR601	269 0112 908	Transistor DTC144WS (47K-22K)T	Built in Resistor
TR604, 605	269 0020 906	Transistor DTC114ES (10K-10K) T	Built in Resistor
D605	276 0432 903	Diode 1SS270A TE	
D610~613	276 0432 903	Diode 1SS270A TE	
D651~654	276 0432 903	Diode 1SS270A TE	
D656~659	276 0432 903	Diode 1SS270A TE	
D661~666	276 0432 903	Diode 1SS270A TE	
D702	276 0432 903	Diode 1SS270A TE	
D707	276 0432 903	Diode 1SS270A TE	
D777	276 0432 903	Diode 1SS270A TE	
RESISTORS GROUP (not included Carbon Film ±5% 1/4W type)			
VR301	211 0734 002	Valiable 5 Kohm(INPUT)	V1420HFA502R
CAPACITORS GROUP			
C602, 603	253 9030 905	Ceramic 0.001μF/25V	CK45=1E102KT
C610	254 4260 951	Electolytic 2.2μF/50V	CE04W1H2R2MT SME
C620	253 9031 917	Ceramic 0.068μF/25V	CK45=1E683KT
C625	254 4260 948	Electolytic 1μF/50V	CE04W1H010MT SME
C632~640	253 9030 905	Ceramic 0.001μF/25V	CK45=1E102KT
OTHER PARTS			
SW651~654	212 4388 907	Tact Switch	
SW656~659	212 4388 907	Tact Switch	
SW661~666	212 4388 907	Tact Switch	
FL601	393 8018 006	FL Tube	BJ281GK
XT601	399 0107 007	Ceramic Resonator	CST4.19MGW
JK303	204 8264 026	Head Phone Jack	
CN291	205 0491 049	21P FFC Connector Base	

PARTS LIST OF KU-9300 AUDIO1 UNIT

Ref. No	Part No.	Part Name	Remarks
SEMICONDUCTORS GROUP			
IC104	263 0711 000	IC M5218AP	
IC305	263 0565 007	IC BA15218	
IC306	263 0715 006	IC CXA1330S	
IC307	263 0565 007	IC BA15218	
IC309	263 0354 001	IC UPC1297CA	
TR103	275 0048 912	Transistor 2SK381 (B)/(C)-T	
TR105	269 0015 908	Transistor DTC124XS (22K-47K) T	Built in Resistor
TR106	273 0245 900	Transistor 2SC2603E/F T	
TR108~110	269 0015 908	Transistor DTC124XS (22K-47K) T	Built in Resistor
TR203	275 0048 912	Transistor 2SK381 (B)/(C)-T	
TR205	269 0015 908	Transistor DTC124XS (22K-47K) T	Built in Resistor
TR206	273 0245 900	Transistor 2SC2603E/F T	
TR208~210	269 0015 908	Transistor DTC124XS (22K-47K) T	Built in Resistor
TR304, 305	269 0015 908	Transistor DTC124XS (22K-47K) T	Built in Resistor
TR306, 307	273 0245 900	Transistor 2SC2603E/F T	
TR308	272 0025 907	Transistor 2SB562(C)TF	
TR311	269 0040 902	Transistor DTC144ES (47K-47K) T	Built in Resistor
D101	276 0432 903	Diode 1SS270A TE	
D201	276 0432 903	Diode 1SS270A TE	
D304, 305	276 0468 906	Zener Diode HZS9B-1 TD	
RESISTORS GROUP (not included Carbon Film ±5% 1/4W type)			
VR302	211 0735 001	Valiable 10K ohm (BALANCE)	V09V25FW103-
VR303	211 0706 001	Valiable 1K ohm (BIAS)	V09V25FB102K
VR304	211 0736 000	Valiable 10K ohm (OUTPUT)	V09V25FA103
RT103	211 6093 697	Adjust 47K ohm	V06PB473T
RT104	211 6047 049	Adjust 22K ohm	V06PB223
RT203	211 6093 967	Adjust 47K ohm	V06PB473T
RT204	211 6047 049	Adjust 22K ohm	V06PB223
CAPACITORS GROUP			
C123	254 4261 918	Electolytic 47μF/50V	CE04W1H470MT SME
C124	254 4260 948	Electolytic 1μF/50V	CE04W1H010MT SME
C125	253 9031 962	Ceramic 0.0027μF/25V	CK45=1E272KT
C126, 127	255 1204 900	Film 0.0022μF/50V	CQ93M1H222JT
C128	254 4278 943	Electolytic 0.56μF/50V	CE04W1HR56MT SME
C129	254 4260 922	Electolytic 0.33μF/50V	CE04W1HR33MT SME
C130, 131	254 4254 909	Electolytic 10μF/16V	CE04W1C100MT SME
C132	253 9030 947	Ceramic 0.0047μF/25V	CK45=1E472KT
C133	254 4258 905	Electolytic 4.7μF/35V	CE04W1V4R7MT SME
C134	254 4252 901	Electolytic 22μF/10V	CE04W1A220MT SME
C135	256 1034 953	Metalized 0.068μF/50V	CF93A1H683JT
C136	253 9030 921	Ceramic 0.0022μF/25V	CK45=1E222KT
C137	256 1179 929	Ceramic 150pF/50V	CK45B1H151KT DD-3
C138	253 9031 991	Ceramic 0.0082μF/25V	CK45=1E822KT
C139	253 9030 934	Ceramic 0.0033μF/25V	CK45=1E332KT
C141	253 9033 988	Ceramic 0.0056μF/25V	CK45=1E562KT
C142	253 1179 903	Ceramic 100pF/50V	CK45B1H101KT DD-3
⚠ C143	253 1131 909	Ceramic 390pF/500V	CK45B2H391KT
C144	253 1111 903	Ceramic 820pF/50V	CK45B1H821KT DD-3
C145	253 9030 963	Ceramic 0.01μF/25V	CK45=1E103KT
C146	253 9031 959	Ceramic 0.0018μF/25V	CK45=1E182KT
C147	253 9030 989	Ceramic 0.022μF/25V	CK45=1E223KT
C149	253 1179 932	Ceramic 180pF/50V	CK45B1H181KT DD-3
C223	254 4261 918	Electolytic 47μF/50V	CE04W1H470MT SME
C224	254 4260 948	Electolytic 1μF/50V	CE04W1H010MT SME
C225	253 9031 962	Ceramic 0.0027μF/25V	CK45=1E272KT
C226, 227	255 1204 900	Film 0.0022μF/50V	CQ93M1H222JT
C228	254 4278 943	Electolytic 0.56μF/50V	CE04W1HR56MT SME
C229	254 4260 922	Electolytic 0.33μF/50V	CE04W1HR33MT SME

Ref. No	Part No.	Part Name	Remarks
C230, 231	254 4254 909	Electolytic 10μF/16V	CE04W1C100MT SME
C232	253 9030 947	Ceramic 0.0047μF/25V	CK45−1E472KT
C233	254 4258 905	Electolytic 4.7μF/35V	CE04W1V4R7MT SME
C234	254 4252 901	Electolytic 22μF/10V	CE04W1A220MT SME
C235	256 1034 953	Metalized 0.068μF/50V	CF93A1H683JT
C236	253 9030 921	Ceramic 0.0022μF/25V	CK45−1E222KT
C237	256 1179 929	Ceramic 150pF/50V	CK45B1H151KT DD-3
C238	253 9031 991	Ceramic 0.0082μF/25V	CK45−1E822KT
C239	253 9030 934	Ceramic 0.0033μF/25V	CK45−1E332KT
C241	253 9033 988	Ceramic 0.0056μF/25V	CK45−1E562KT
C242	253 1179 903	Ceramic 100pF/50V	CK45B1H101KT DD-3
⚠ C243	253 1131 909	Ceramic 390pF/500V	CK45B2H391KT
C244	253 1111 903	Ceramic 820pF/50V	CK45B1H821KT DD-3
C245	253 9030 963	Ceramic 0.01μF/25V	CK45−1E103KT
C246	253 9031 959	Ceramic 0.0018μF/25V	CK45−1E182KT
C247	253 9030 989	Ceramic 0.022μF/25V	CK45−1E223KT
C249	253 1179 932	Ceramic 180pF/50V	CK45B1H181KT DD-3
C309	253 9030 989	Ceramic 0.022μF/25V	CK45−1E223KT
C312, 313	254 4254 909	Electolytic 10μF/16V	CE04W1C100MT SME
C314	253 9031 904	Ceramic 0.047μF/25V	CK45−1E473KT
C315	253 4535 942	Ceramic 4pF/50V	CC45SL1H040CT DD-3
C316	254 4254 909	Electolytic 10μF/16V	CE04W1C100MT SME
C317	254 4252 927	Electolytic 47μF/10V	CE04W1A470MT SME
C321	255 4120 900	Film 0.0068μF/100V	CQ93P2A682JT
C324	254 4256 949	Electolytic 100μF/25V	CE04W1E101MT SME
C326, 327	254 4254 909	Electolytic 10μF/16V	CE04W1C100MT SME
C330	253 9030 963	Ceramic 0.01μF/25V	CK45−1E103KT
C331	253 9031 991	Ceramic 0.0082μF/25V	CK45−1E822KT
C332, C333	253 9030 934	Ceramic 0.0033μF/25V	CK45−1E322KT
C336	253 9030 905	Ceramic 0.001μF/25V	CK45−1E102KT
C622	253 9031 917	Ceramic 0.0068μF/25V	CK45−1E683KT
OTHER PARTS			
JK301	204 8261 003	4P Pin Jack	
L102	232 0109 003	MPX Filter	
L103	235 0020 945	Inductor 153JT	
L104	235 0020 903	Inductor 682JT	
L105	239 0010 009	HX Step up coil	
L202	232 0109 003	MPX Filter	
L203	235 0020 945	Inductor 153JT	
L204	235 0020 903	Inductor 682JT	
L205	239 0010 009	HX Step up coil	
L301	231 0078 005	Oscillator Coil	

PARTS LIST OF KU-9301 AUDIO2 UNIT

Ref. No.	Part No.	Part Name	Remarks
SEMICONDUCTORS GROUP			
IC103	262 0276 005	IC HD14066BP	
IC301	262 0864 006	IC UPC4570C	
IC302	263 0715 006	IC CXA1330S	
IC304	263 0711 000	IC M5218AP	
IC308	263 0565 007	IC BA15218	
IC310	263 0565 007	IC BA15218	
IC601	263 0565 007	IC BA15218	
IC604, 605	262 1295 001	IC UPD4094BC	
IC904, 905	262 0447 009	IC BA6109U1	
TR101, 102	273 0245 900	Transistor 2SC2603E/F T	
TR111	273 0245 900	Transistor 2SC2603E/F T	
TR201, 202	273 0245 900	Transistor 2SC2603E/F T	
TR211	273 0245 900	Transistor 2SC2603E/F T	
TR301	269 0019 904	Transistor DTA143XS (4.7K-10K) T	Built in Resistor
TR302	269 0062 906	Transistor DTC124XS (22K-22K) T	Built in Resistor
TR316	269 0015 908	Transistor DTC124XS (22K-47K) T	Built in Resistor
TR317	269 0040 902	Transistor DTC144ES (47K-47K) T	Built in Resistor
TR321, 322	269 0018 905	Transistor DTC143ES (4.7K-4.7K) T	Built in Resistor
TR323	269 0020 904	Transistor DTA143ES (4.7K-4.7K) T	Built in Resistor
TR850	269 0015 908	Transistor DTC124XS (22K-47K) T	Built in Resistor
TR908	269 0015 908	Transistor DTC124XS (22K-47K) T	Built in Resistor
TR909	272 0025 907	Transistor 2SB562 (C) TF	
TR910	269 0090 907	Transistor DTC143XS-T	Built in Resistor
D301, 302	276 0432 903	Diode 1SS270A TE	
D308	276 0432 903	Diode 1SS270A TE	
D310	276 0432 903	Diode 1SS270A TE	
D311	276 0468 906	Zener Diode HZS9B-1 TD	
D312	276 0432 903	Diode 1SS270A TE	
D314	276 0468 906	Zener Diode HZS9B-1 TD	
D601	276 0432 903	Diode 1SS270A TE	
D669	276 0432 903	Diode 1SS270A TE	
D701	276 0432 903	Diode 1SS270A TE	
D917	276 0460 908	Zener Diode HZS5C-1 TD	
D919	276 0466 908	Zener Diode HZS7C-1 TD	
D920	276 0471 906	Zener Diode HZS11B-1 TD	
D921	276 0553 905	Diode 1SR35-200A (T93X)	
RESISTORS GROUP (not included Carbon Film ±5% 1/4W type)			
⚠ R917	244 0077 028	Metal oxide film 18 ohm 2W (Non-burning type)	RS14B3D180JNBF
⚠ R920	241 2315 912	Carbon (Fusible) 10 ohm	RD14B2E100GFRST
RT101	211 6047	Adjust 22K ohm	V06PB223
RT201	211 6047 049	Adjust 22K ohm	V06PB223
CAPACITORS GROUP			
C101	253 1179 916	Ceramic 120pF/50V	CK45B1H121KT DD-3
C102	255 1209 905	Film 0.0056μF/50V	CQ93M1H562JT
C103	254 3056 917	Electolytic 1μF/50V (Bipolar)	CE04D1H010MBPT SME
C104	255 1217 900	Film 0.027μF/50V	CQ93M1H273JT
C106	254 4260 948	Electolytic 1μF/50V	CE04W1H010MT SME
C110,111	255 1204 900	Film 0.0022μF/50V	CQ93M1H222JT
C112	254 4278 943	Electolytic 0.56μF/50V	CE04W1HR56MT SME
C113	254 4260 922	Electolytic 0.33μF/50V	CE04W1HR33MT SME

Ref. No.	Part No.	Part Name	Remarks
C114	254 4254 909	Electolytic 10μF/16V	CE04W1C100MT SME
C115	254 4260 951	Electolytic 2.2μF/50V	CE04W1H2R2MT SME
C116	254 4260 948	Electolytic 1μF/50V	CE04W1H010MT SME
C117	253 1179 945	Ceramic 220pF/50V	CK45B1221KT DD-3
C148	253 1179 903	Ceramic 100pF/50V	CK45B1H101KT DD-3
C201	253 1179 916	Ceramic 120pF/50V	CK45B1H121KT DD-3
C202	255 1209 905	Film 0.0056μF/50V	CQ93M1H562JT
C203	254 3056 917	Electolytic 1μF/50V (Bipolar)	CE04D1H010MBPT SME
C204	255 1217 900	Film 0.027μF/50V	CQ93M1H273JT
C206	254 4260 948	Electolytic 1μF/50V	CE04W1H010MT SME
C210, 211	255 1204 900	Film 0.0022μF/50V	CQ93M1H222JT
C212	254 4278 943	Electolytic 0.56μF/50V	CE04W1HR56MT SME
C213	254 4260 922	Electolytic 0.33μF/50V	CE04W1HR33MT SME
C214	254 4254 909	Electolytic 10μF/16V	CE04W1C100MT SME
C215	254 4260 954	Electolytic 2.2μF/50V	CE04W1H2R2MT SME
C216	254 4260 948	Electolytic 1μF/50V	CE04W1H010MT SME
C217	253 1179 945	Ceramic 220pF/50V	CK45B1H221KT DD-3
C248	253 1179 903	Ceramic 100pF/50V	CK45B1H101KT DD-3
C301, 302	254 4252 969	Electolytic 470μF/10V	CE04W1A471MT SME
C303, 304	254 4254 909	Electolytic 10μF/16V	CE04W1C100MT SME
C305	254 4260 951	Electolytic 2.2μF/50V	CE04W1H2R2MT SME
C307	253 9030 934	Ceramic 0.0033μF/25V	CK45=1E332KT
C308	254 4252 901	Electolytic 22μF/10V	CE04W1A220MT SME
C311	253 9030 947	Ceramic 0.0047μF/25V	CK45=1E472KT
C320	253 9031 917	Ceramic 0.068μF/25V	CK45=1E683KT
C334, 335	253 9039 906	Ceramic 0.1μF/25V	CK45=1E104ZT DD-3
C341	253 9030 989	Ceramic 0.022μF/25V	CK45=1E223KT
C342	253 9030 921	Ceramic 0.0022μF/25V	CK45=1E222KT
C343	253 9030 963	Ceramic 0.01μF/25V	CK45=1E103KT
C601	254 4260 964	Electolytic 3.3μF/50V	CE04W1H3R3MT SME
C623	253 9031 917	Ceramic 0.068μF/25V	CK45=1E683KT
C701	254 4260 964	Electolytic 3.3μF/50V	CE04W1H3R3MT SME
C799	254 4256 907	Electolytic 10μF/25V	CE04W1E100MT SME
C850	254 4254 909	Electolytic 10μF/16V	CE04W1C100MT SME
C915	253 9030 963	Ceramic 0.01μF/25V	CK45=1E103KT
C917	253 9030 963	Ceramic 0.01μF/25V	CK45=1E103KT
C918	253 9030 989	Ceramic 0.022μF/25V	CK45=1E223KT
C919	253 9030 963	Ceramic 0.01μF/25V	CK45=1E103KT
C920	254 4255 717	Electolytic 4700μF/16V	CE04W1C472MC SME
OTHER PARTS			
JK304	204 8461 007	Mini Jack	
L101	232 0825 009	Bias Filter	
L201	232 0825 009	Bias Filter	
CN291	205 0491 049	21P FFC Connectoe Base	

PARTS LEST OF KU-9311 POWER UNIT

Ref. No.	Part No.	Part Name	Remarks
SEMICONDUCTORS GROUP			
IC901	263 0810 008	IC NJM7808FA(S)	
IC902	263 0503 001	IC NJM7908A	
IC903	263 0793 002	IC NJM7806FA(S)	
TR904	272 0025 907	Transistor 2SB562(C)TF	
D901~906	276 0553 905	Diode 1SR35-200A (T93X)	
D909, 910	276 0432 903	Diode 1SS270A TE	
D911, 912	276 0553 905	Diode 1SR35-200A (T93X)	
D914	276 0483 907	Zener Diode HZS30-1TD	
D915	276 0468 906	Zener Diode HZS9B-1TD	
D918	276 0461 903	Zener Diode HZS6A-1TD	
D922, 923	276 0553 905	Diode 1SR35-200A (T93X)	
CAPACITORS GROUP			
C001	253 8014 702	Ceramic Capacitor 0.01μF/400VAC	CK45F2GAC103MC
C900	254 4403 721	Electolytic 2200μF/25V	CE04W1E222MC SMG
C901, 902	254 4403 718	Electolytic 1000μF/25V	CE04W1E102MC SMG
C903	254 4403 721	Electolytic 2200μF/25V	CE04W1E222MC SMG
C904, 905	254 4252 930	Electolytic 100μF/10V	CE04W1A101MC SME
C907	254 4414 707	Electolytic 470μF/50V	CE04W1H471MC SMG
C908	254 4258 947	Electolytic 47μF/35V	CE04W1V470MT SME
C909	254 4252 927	Electolytic 47μF/10V	CE04W1A470MT SME
C910	254 4258 947	Electolytic 47μF/35V	CE04W1V470MT SME
C911	254 4256 952	Electolytic 220μF/25V	CE04W1E221MT SME
C912	254 4260 951	Electolytic 2.2μF/50V	CE04W1H2R2MT SME
C921	254 4250 796	Electolytic 4700μF/6.3V	CE04W0J472MC SME
OTHER PARTS			
⚠ SW001	212 0286 003	Power Switch (TV-3)	
⚠ T901	233 5985 005	Power Transformer	Europe, UK, Australia
⚠ T901	233 5758 009	Power Transformer	USA, Canada
⚠ T901	233 5760 000	Power Transformer	Multi-Voltage
⚠ T901	206 1031 045	Fuse (0.25)A	Multi-Voltage only
	202 0022 008	Fuse Holder	Multi-Voltage only
⚠ SW002	212 4698 008	Voltage Selector (D)	Multi-Voltage only

PARTS LIST OF PACKING & ACCESSORIES

Ref. No.	Part No.	Part Name	Remarks	Q'ty
	504 0092 060	STYRENE PAPER	For AC ORD	1
	505 0131 050	CABINET COVER		1
	503 0704 106	PACKING ASS'Y		1
	503 9260 007	CUSHION	Australia, U.K., Only	2
	502 9130 008	PAD ASS'Y	Australia, U.K., Only	1
	501 9254 046	CARTON CASE		1
	513 9111 001	COLOR LABEL (GOLD)	(Gold) Only	1
	505 0038 030	PORY COVER		1
	511 9371 007	INST. MANUAL	Europe, U.K., Australia	1
	511 9370 008	INST. MANUAL	U.S.A., Canada, Multiple Voltage (Asia)	1
	511 9372 006	INST. MANUAL	Asia Only	1
	203 2360 004	2P PIN CORD		2
	203 5013 002	3P MINI PLUG CORD		1
	515 0455 005	TAPE CATALOG (E2)	Europe, U.S.A. Only	1
⚠	203 3667 007	PLUG ADAPTER	Multiple Voltage (Asia) Only	1

PARTS LIST OF EXPLODED VIEW

Ref. No.	Part No.	Part Name	Remarks
◉ 1	411 9124 006	CHASSIS	
◉	411 9124 022	CHASSIS	(Gold)
◉ 2	412 2523 102	EARTH BRACKET	
◉ 3	105 0787 107	BOTTOM COVER	
4	338 9024 005	CASSETTE MECHA. (CMAH)	
⚠ 5	233 5985 005	POWER TRANS.	Europe, U.K. Australia
⚠	233 5758 009	POWER TRANS.	U.S.A., Canada
⚠	233 5760 000	POWER TRANS.	Multiple Voltage (Asia)
⚠ 6	212 0286 003	POWER SWITCH	SW001
⚠ 7	206 2063 009	AC CORD WITH PLUG	Europe
⚠	206 2127 000	AC CORD WITH LABEL	U.K.
⚠	206 2060 002	AC CORD	U.S.A., Canada
⚠	206 2122 005	AC CORD	Australia
⚠	200 6031 026	AC CORD	Multiple Voltage (Asia)
⚠ 8	445 0056 008	CORD BUSH	
◉ 9	412 2008 012	BUSHING PLATE	
◉ 10	KU- 9301	AUDIO 2 P.W.B. UNIT	
◉ 11	414 0637 009	SHIELD LABEL	
12	104 0208 201	FOOT ASS'Y	
◉ 13	KU- 9300	AUDIO1 P.W.B. UNIT	
◉ 14	KU- 9311	POWER P.W.B. UNIT	
15	205 0712 074	7P TBG-S CONNECTOR	
16	204 8261 003	4P PIN JACK	JK301
17	204 8416 007	MINI JACK	
◉ 18	KU- 9299	DISPLAY P.W.B. UNIT	
18-1		METER UNIT	
18-2		INPUT VR UNIT	
18-3		HEAD PHONE UNIT	
23	393 8018 006	FL TUBE	
25	431 0310 004	POWER SW. LEVER ASS'Y	
	431 0310 020	POWER SW. LEVER ASS'Y	(Gold)
26	113 1481 306	PUSH KNOB (B)	
	113 1481 322	PUSH KNOB (B)	(Gold)
27	113 1436 335	FUNCTION KEY	
	113 1436 351	FUNCTION KEY	(Gold)
28	113 1480 200	PUSH KNOB (A)	
	113 1480 226	PUSH KNOB (A)	(Gold)
29	113 1438 003	EJECT KNOB	
	113 1438 029	EJECT KNOB	(Gold)
30	112 0515 131	VOL. KNOB	
	112 0515 144	VOL. KNOB	(Gold)
31	112 0727 000	VOL. KNOB (C)	
	112 0727 013	VOL. KNOB (C)	(Gold)
◉ 33	103 9194 009	FRONT ESC. ASS'Y	
◉	103 9194 012	FRONT ESC. ASS'Y	(Gold)
◉ 34	144 9195 009	FRONT PANEL	
◉	144 9195 012	FRONT PANEL	(Gold)
35	103 1511 305	CASSETTE BOX	
36	463 0655 009	CASSETTE SPRING	
37	463 0659 005	BOX SPRING (R)	
38	103 9195 008	CASSETTE WINDOW (A) ASS'Y	
	103 9195 011	CASSETTE WINDOW (A) ASS'Y	(Gold)
39	421 9007 007	MINI DAMPER	
◉ 40	414 0595 015	EARTH PLATE	
◉ 41	203 0325 067	1P CONTACT ASS'Y	

Ref. No.	Part No.	Part Name	Remarks
◉ 45	102 0434 406	TOP COVER	
◉	102 0434 419	TOP COVER	(Gold)
101	473 7508 017	3×10 CBTS (P)-B	
102	477 0262 006	SPECIAL SCREW	
103	473 7502 013	4×10 CBTS (P)-Z	
104	473 7503 038	4×10 CTTS (P)-BK	
	473 7503 041	4×10 CTTS (P)-NI	(Gold)
105	473 7500 044	3×8 CBTS (P)-B	
106	473 7002 018	3×8 CBTS (S)-Z	
107	473 7001 035	2.6×6 CBTS (S)-Z	
108	477 0017 002	3 TWZ	

WARNING:

- Parts marked with ⚠ and/or shading have special characteristics important to safety.
  Be sure to use the specified parts for replacement.
- (Gold) in the Remarks column refers with gold front panels.
- Part indicated with the mark ◉ are not always in stock and possibly to take a long period of time for supplying, or in some case supplying of part may be refused.

EXPLODED VIEW

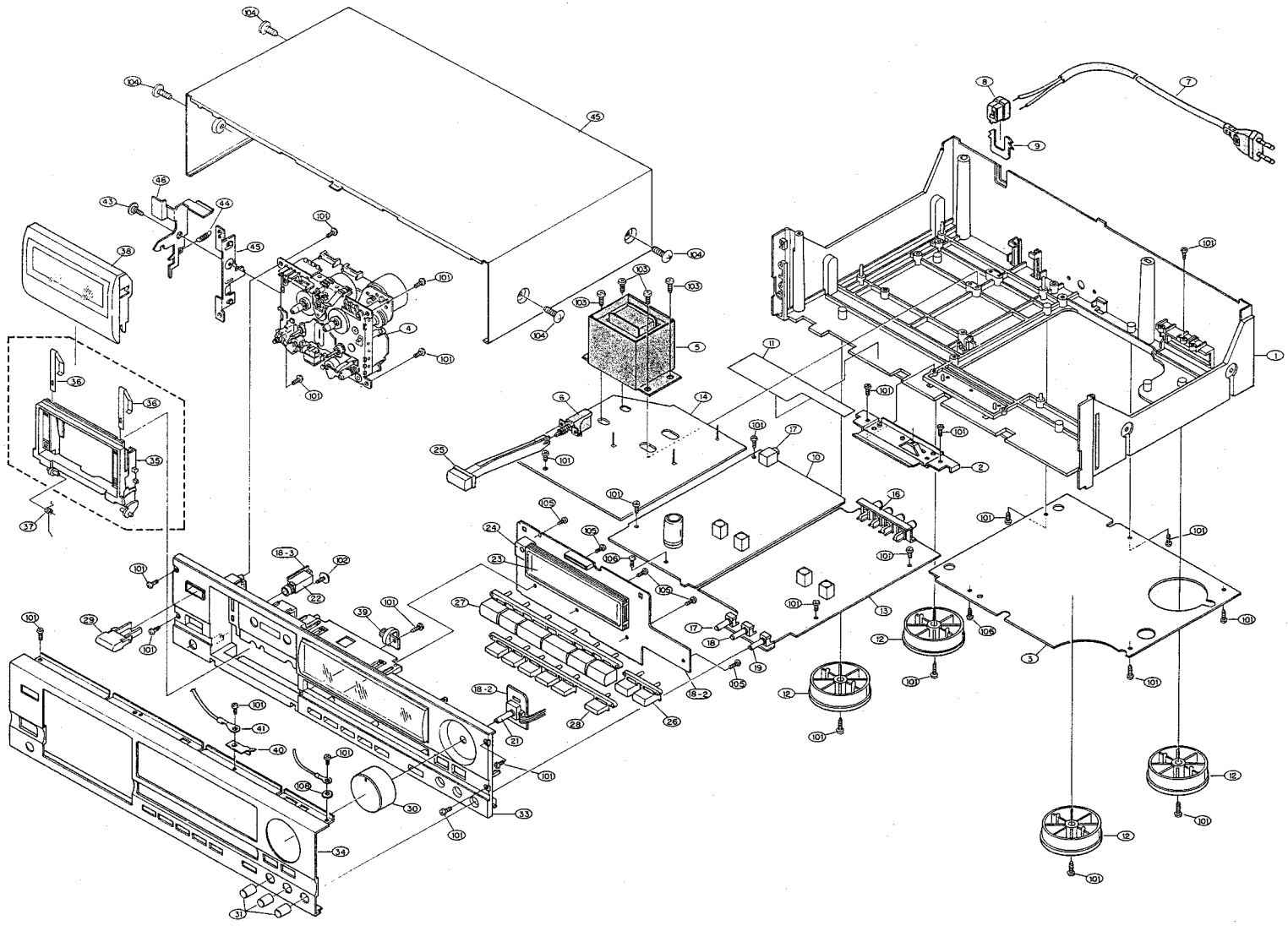

WARNING:
Parts marked with this symbol ⚠ ▨ have critical characteristics.
Use ONLY replacement parts recommended by the manufacturer.

P.W. BOARD OF KU-2999 DISPLAY UNIT

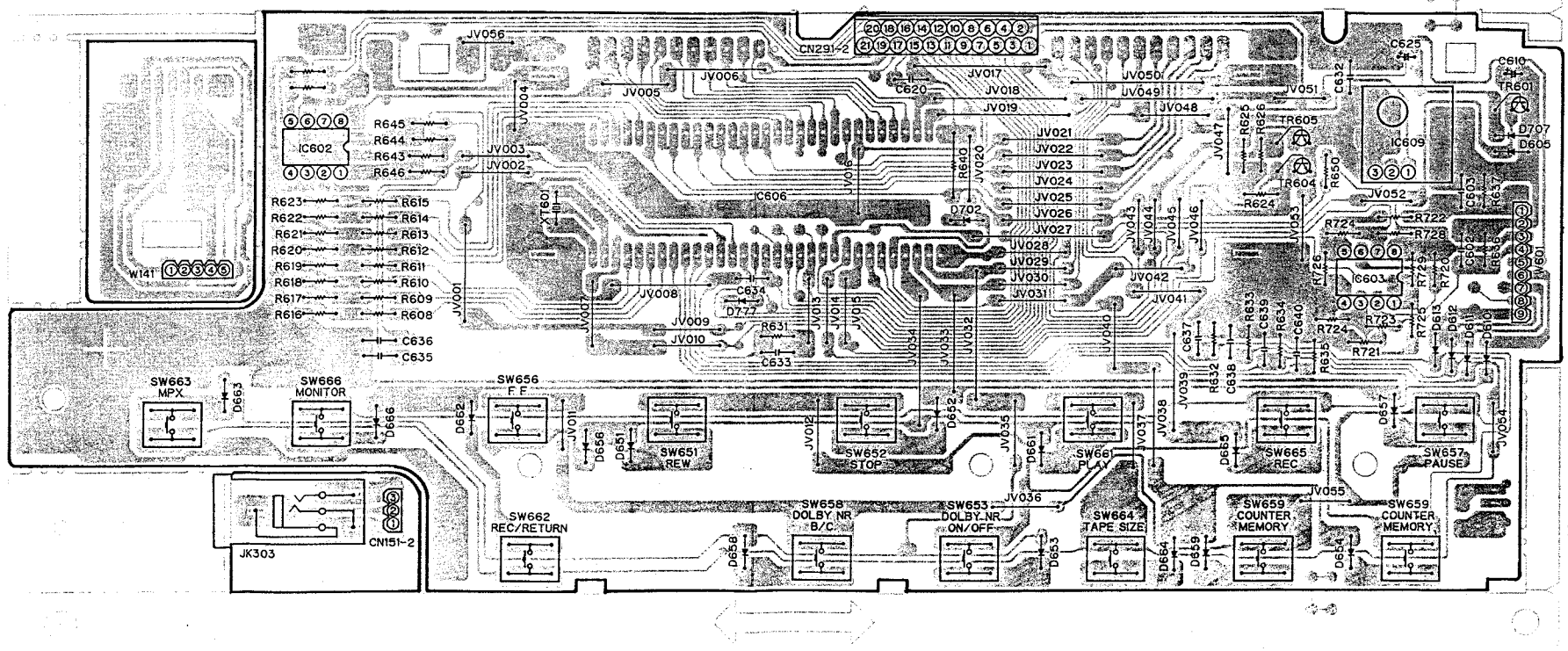

P.W. BOARD OF KU-9300 AUDIO1 UNIT

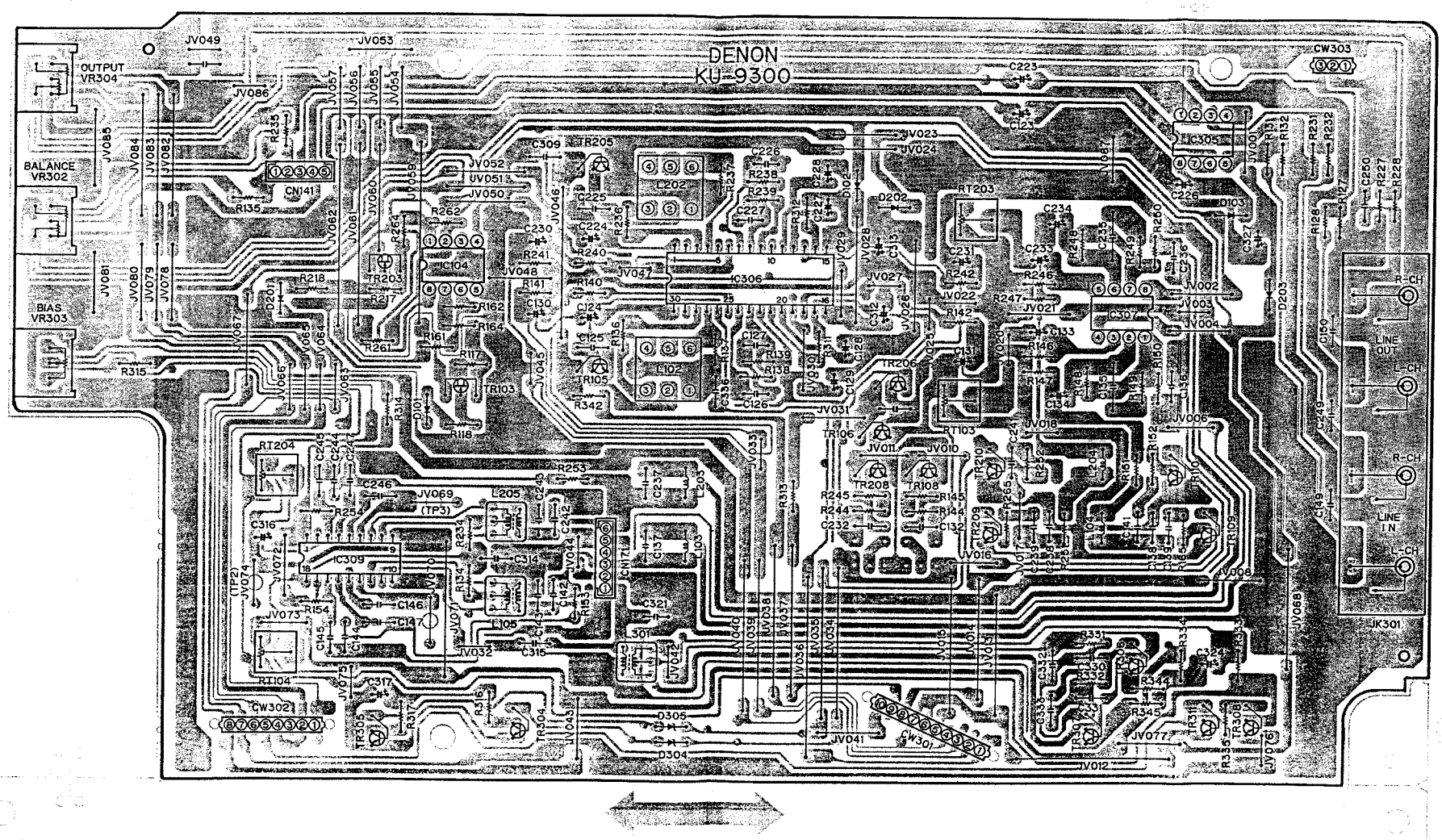

P.W. BOARD OF KU-9301 AUDIO2 UNIT

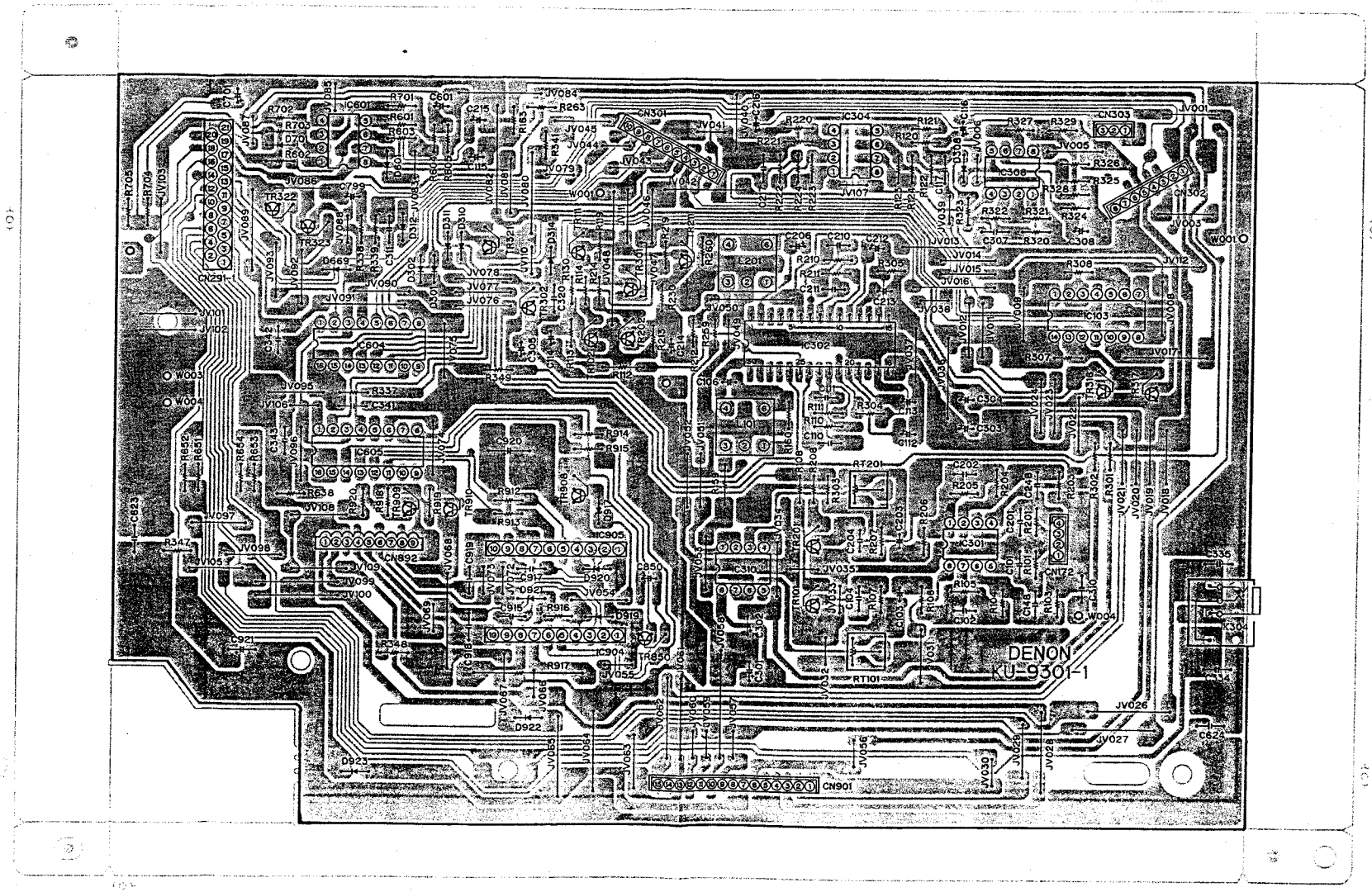

P.W. BOARD OF KU-9311 POWER SUPPLY UNIT

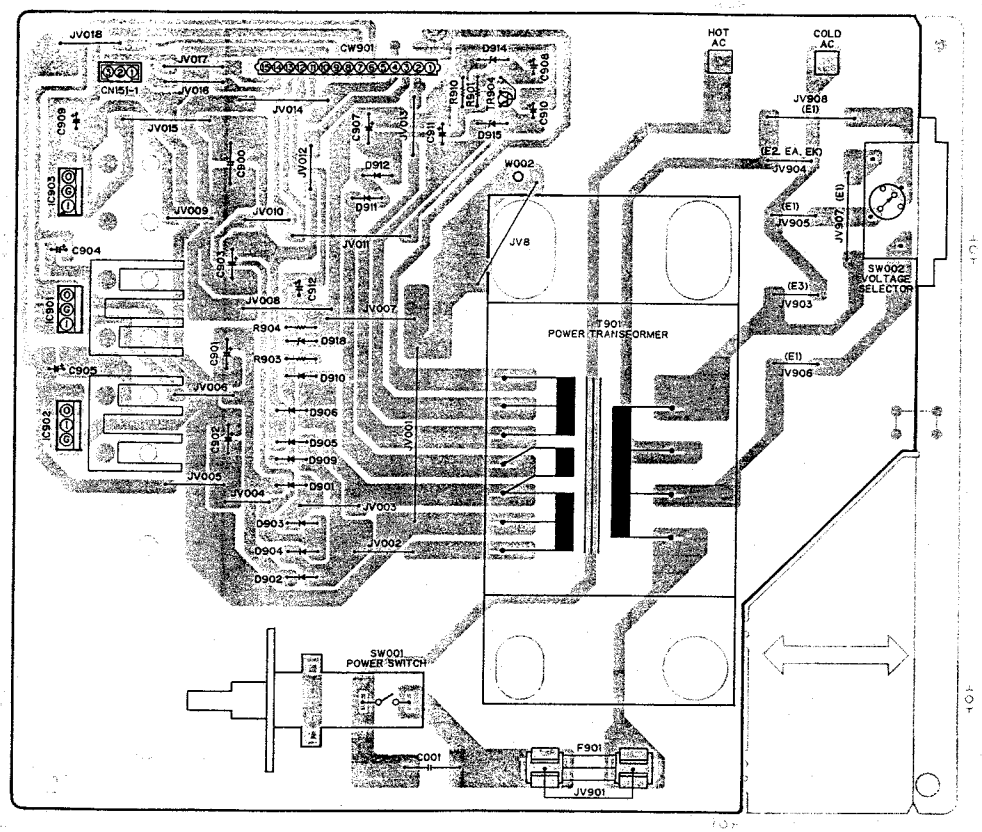

BUNDLE DIAGRAM

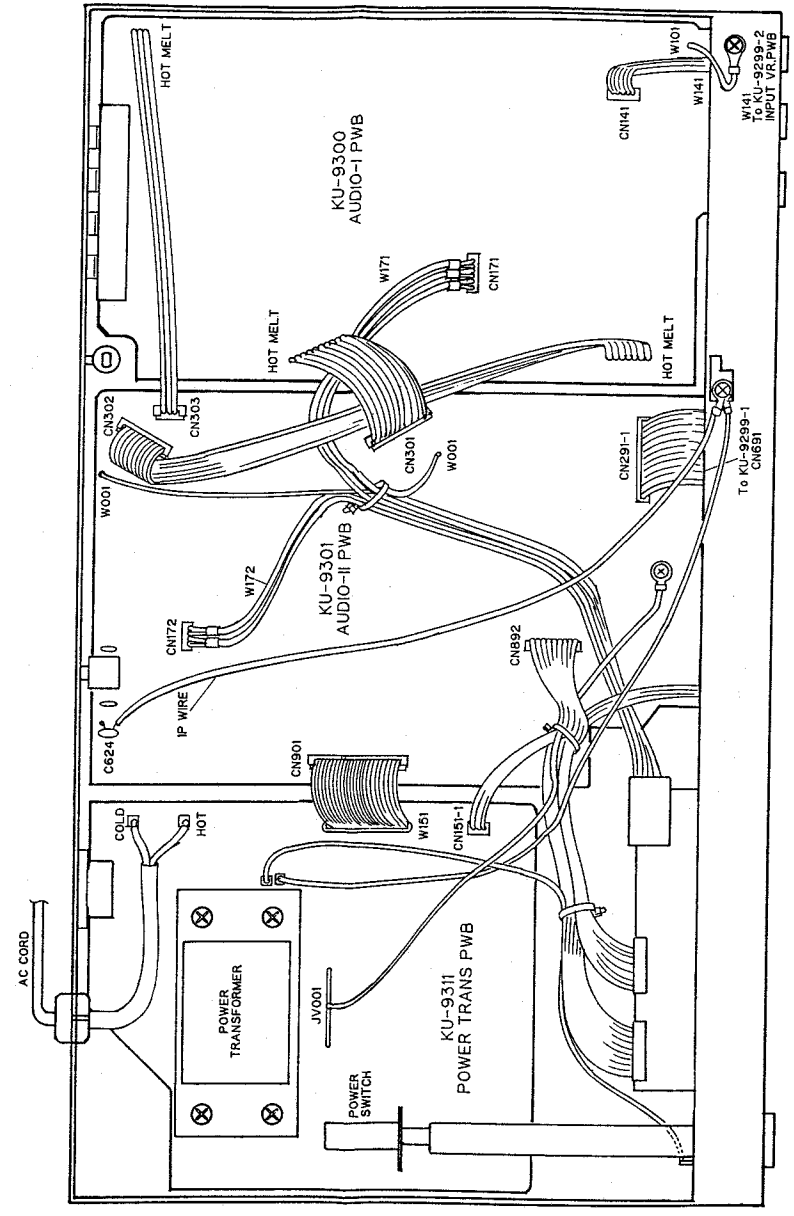

WIRING DIAGRAM

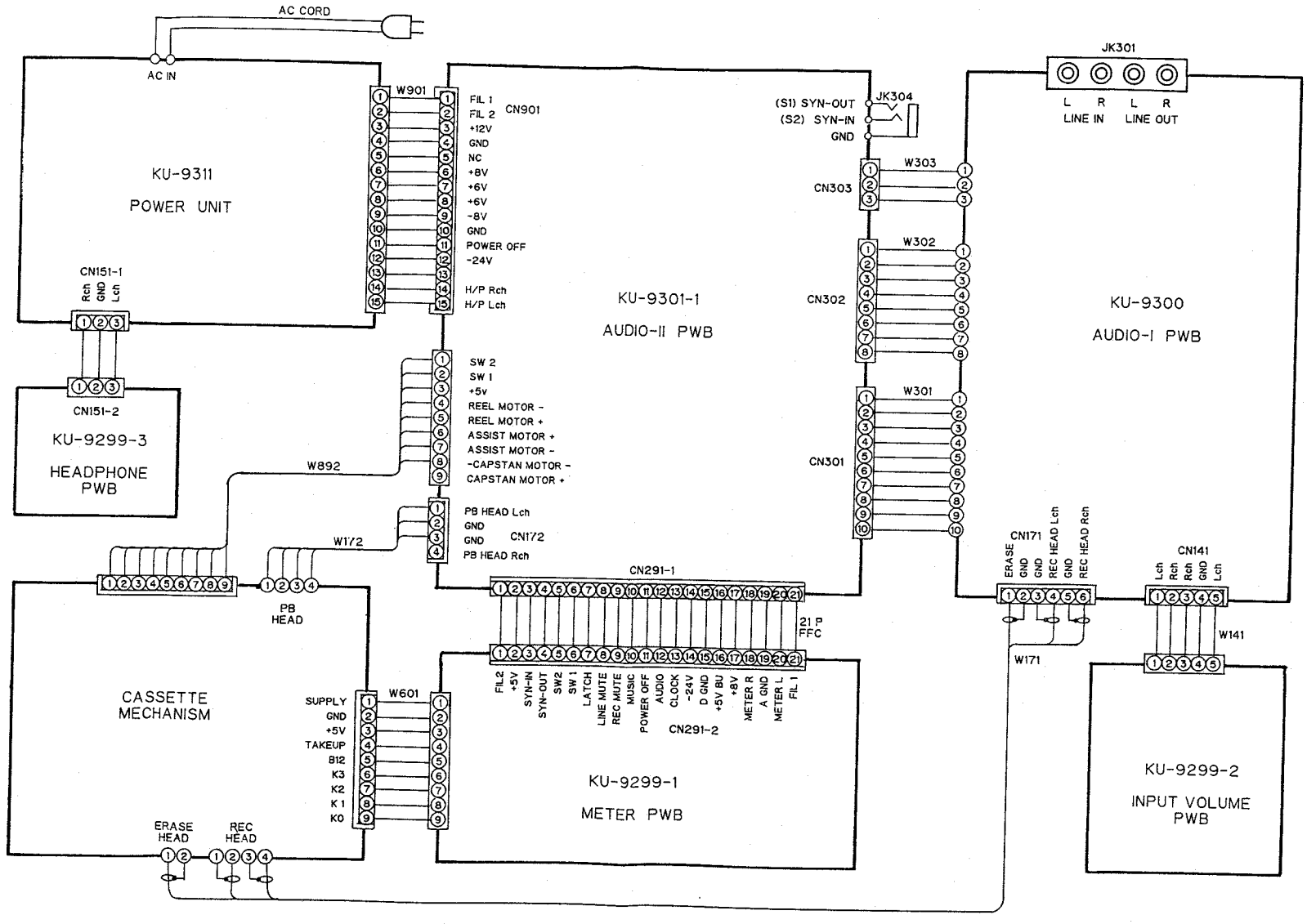

SCHEMATIC DIAGRAM

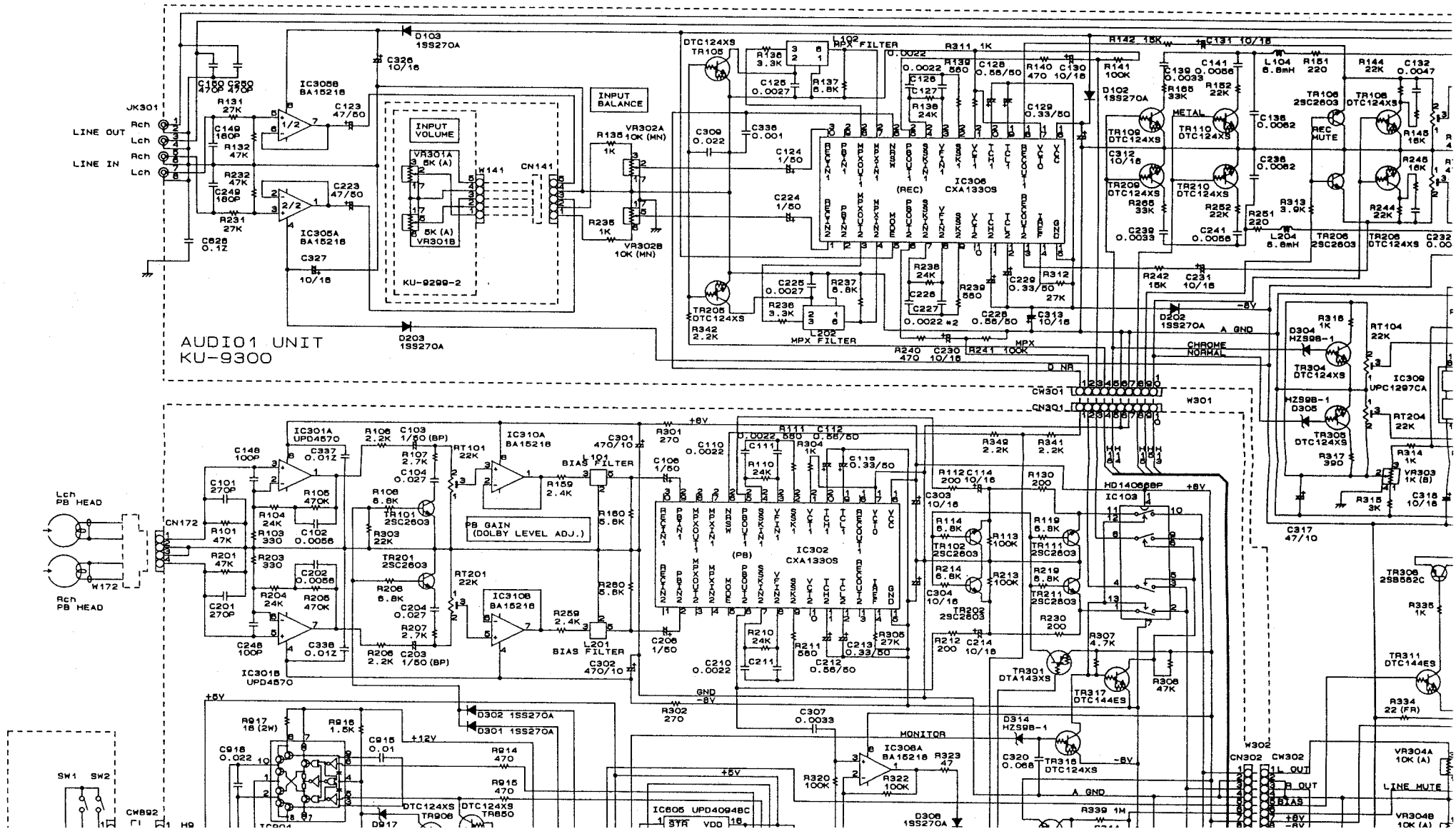

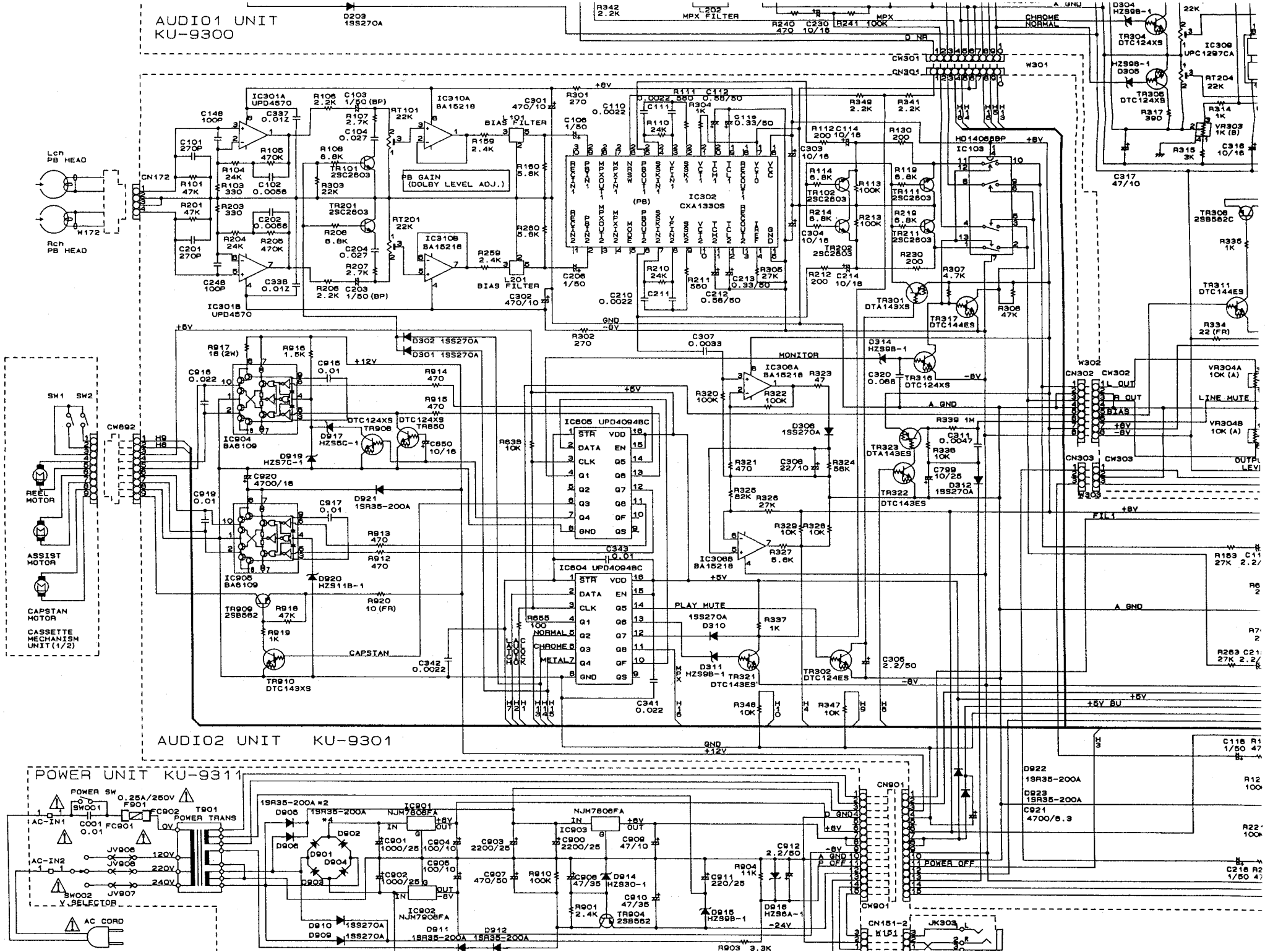
AUDIO1 UNIT
KU-9300
AUDIO2 UNIT KU-9301
POWER UNIT KU-9311
Lch PB HEAD
Rch PB HEAD
CN172
W172
IC301A UPD4570
IC301B UPD4570
IC310A BA15218
IC310B BA15218
PB GAIN (DOLBY LEVEL ADJ.)
BIAS FILTER
IC302 CXA1330S
(PB)
IC603 UPD4094BC
IC604 UPD4094BC
IC904 BA6109
IC905 BA6109
IC306A BA15218
IC306B BA15218
MONITOR
PLAY MUTE
CAPSTAN
NORMAL
CHROME
METAL
REEL MOTOR
ASSIST MOTOR
CAPSTAN MOTOR
CASSETTE MECHANISM UNIT(1/2)
CN892
SW1 SW2
L202 MPX FILTER
MPX
CHROME NORMAL
D NR
CW301
CN301
W301
IC309 UPC1297CA
IC103 HD14066BP
TR308 2SB562C
TR311 DTC144ES
VR304A 10K (A)
VR304B 10K (A)
LINE MUTE
W302
CN302 CW302
W303
CN303 CW303
L OUT
R OUT
BIAS
OUTPUT LEVEL
FIL1
A GND
D GND
POWER OFF
POWER SW
SW001
AC-IN1
AC-IN2
F901
T901 POWER TRANS
V SELECTOR
AC CORD
IC901 NJM7808FA
IC902 NJM7908FA
IC903 NJM7808FA
CN901
CW901
CN151-2
JK303

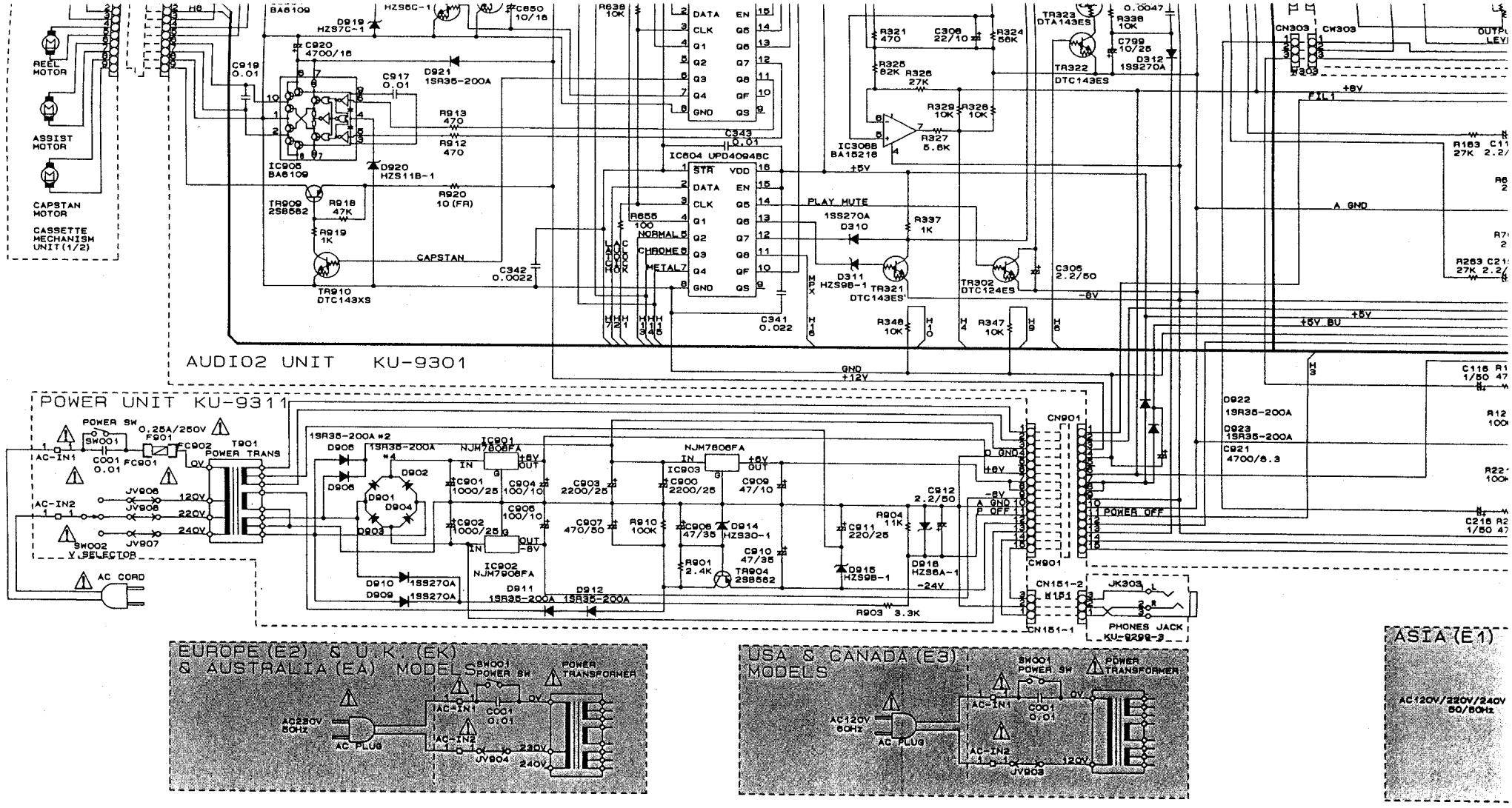

WARNING:
Parts marked with this symbol ⚠ ▭ have critica
Use ONLY replacement parts recommended by the r

CAUTION:
Before returning the unit to the customer, make sure
check or (2) a line to chassis resistance check. If the
or if the resistance from chassis to either side of the
unit is defective.

WARNING:
DO NOT return the unit to the customer until the pro

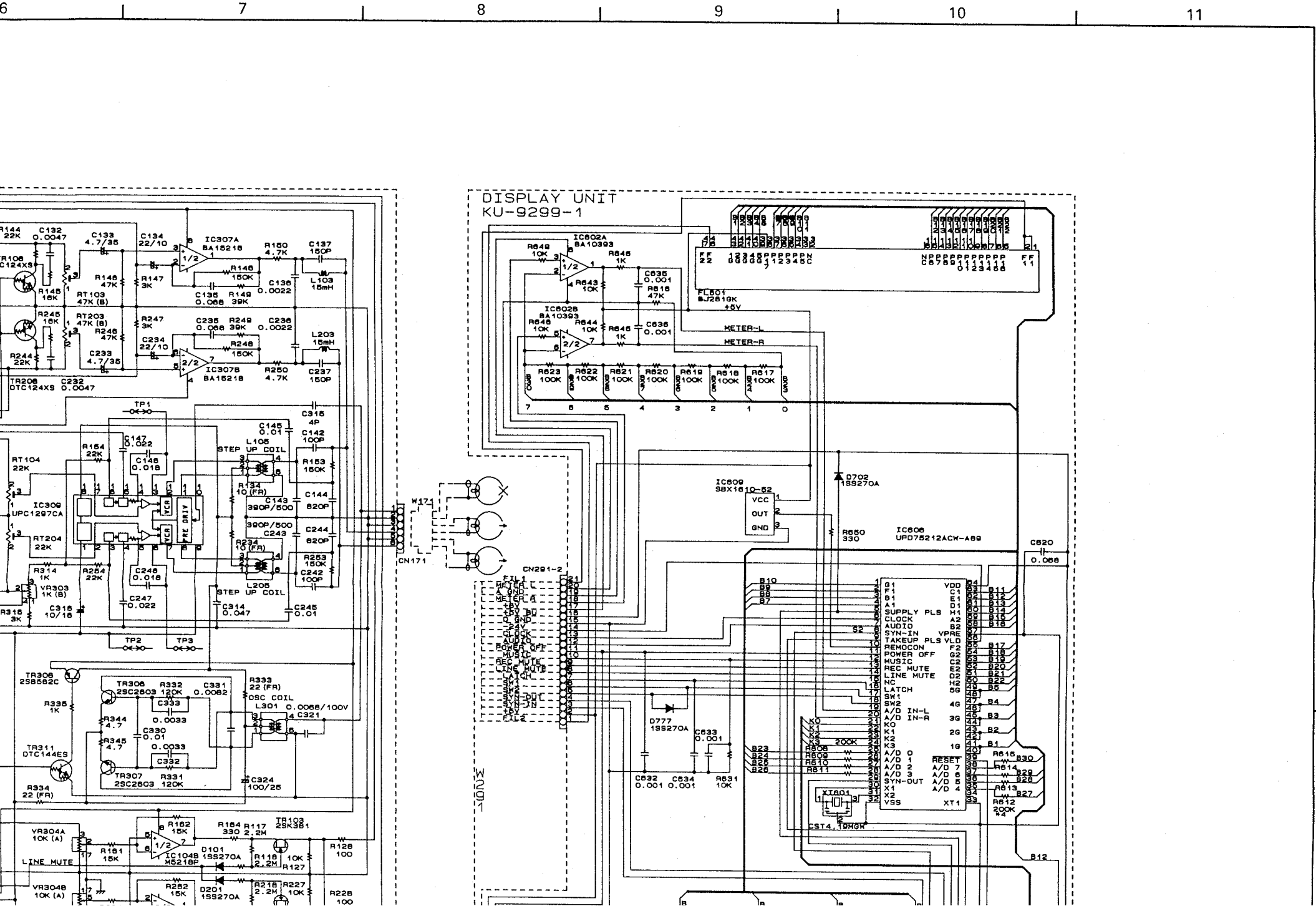
DISPLAY UNIT
KU-9299-1
IC307A BA15218
IC307B BA15218
IC309 UPC1297CA
IC602A BA10393
IC602B BA10393
IC609 SBX1610-52
IC606 UPD75212ACW-A89
IC104B M5218P
TR306 2SC2603
TR307 2SC2603
TR308 2SB562C
TR311 DTC144ES
TR103 2SK381
TR206 DTC124XS
L105 STEP UP COIL
L205 STEP UP COIL
L301 OSC COIL
L103 15mH
L203 15mH
CN171
CN291-2
W171
W101
FL601 BJ261GK
XTA01 CST4.19MGK
METER-L
METER-R
LINE MUTE
TP1
TP2
TP3
D702 1SS270A
D777 1SS270A
D101 1SS270A
D201 1SS270A

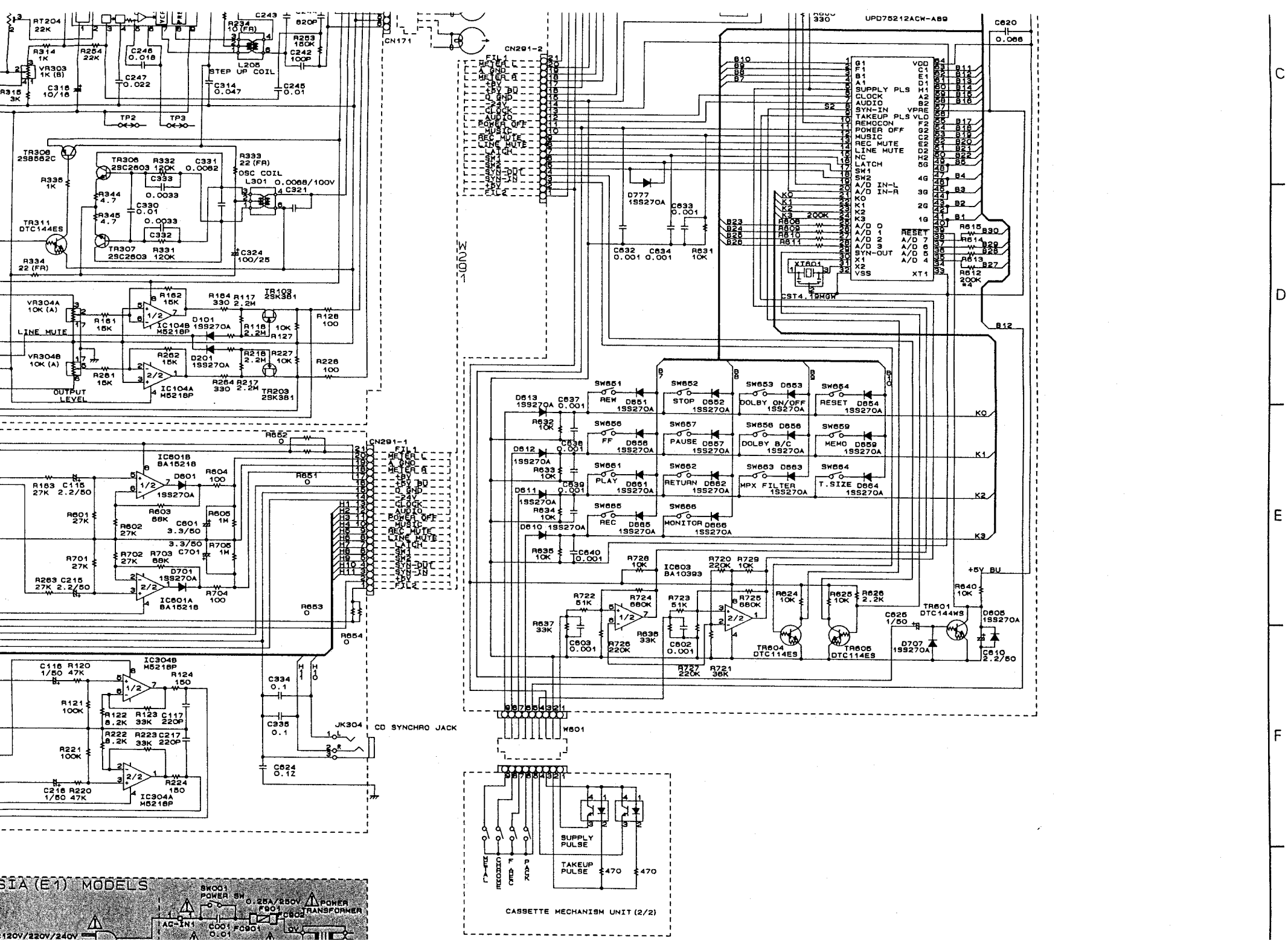
UPD75212ACW-A89
CN171
CN291-2
CN291-1
STEP UP COIL
OSC COIL
LINE MUTE
OUTPUT LEVEL
CD SYNCHRO JACK
CASSETTE MECHANISM UNIT (2/2)
SUPPLY PULSE
TAKEUP PULSE
SIA(E1) MODELS
POWER TRANSFORMER

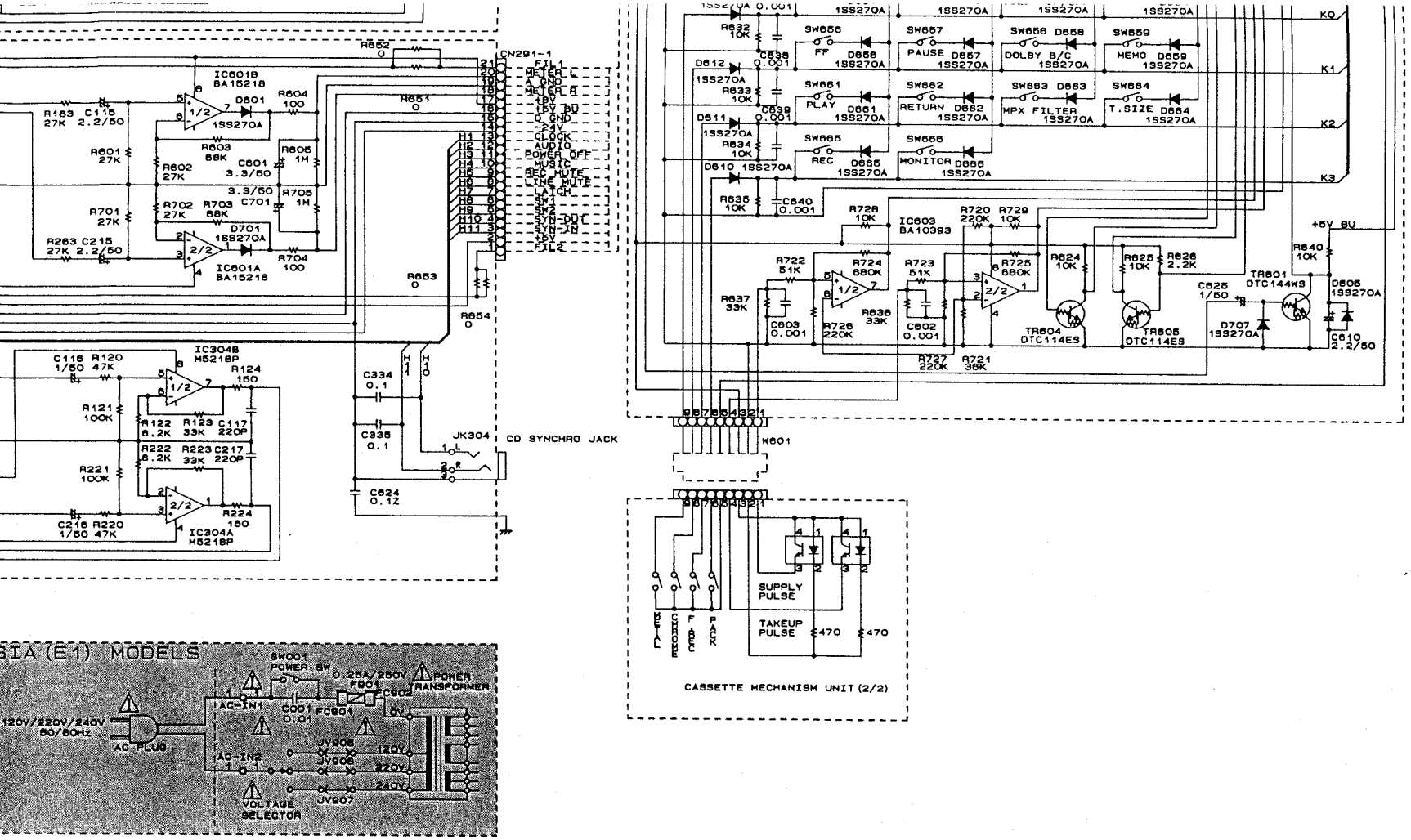

have critical characteristics.
mended by the manufacturer.

omer, make sure you make either (1) a leakage current
nce check. If the leakage current exceeds 0.5 miliamps,
either side of the power cord is less than 240 kohms, the

mer until the problem is located and corrected.

NOTES

ALL RESISTANCE VALUES IN OHM. K = 1,000 OHM, M = 1,000,000 OHM
ALL CAPACITANCE VALUES IN MICRO FARAD. P = MICRO-MICRO FARAD
EACH VOLTAGE AND CURRENT ARE MEASURED AT NO SIGNAL INPUT CONDITION.
CIRCUIT AND PARTS ARE SUBJECT TO CHANGE WITHOUT PRIOR NOTICE.

EXPLODED VIEW

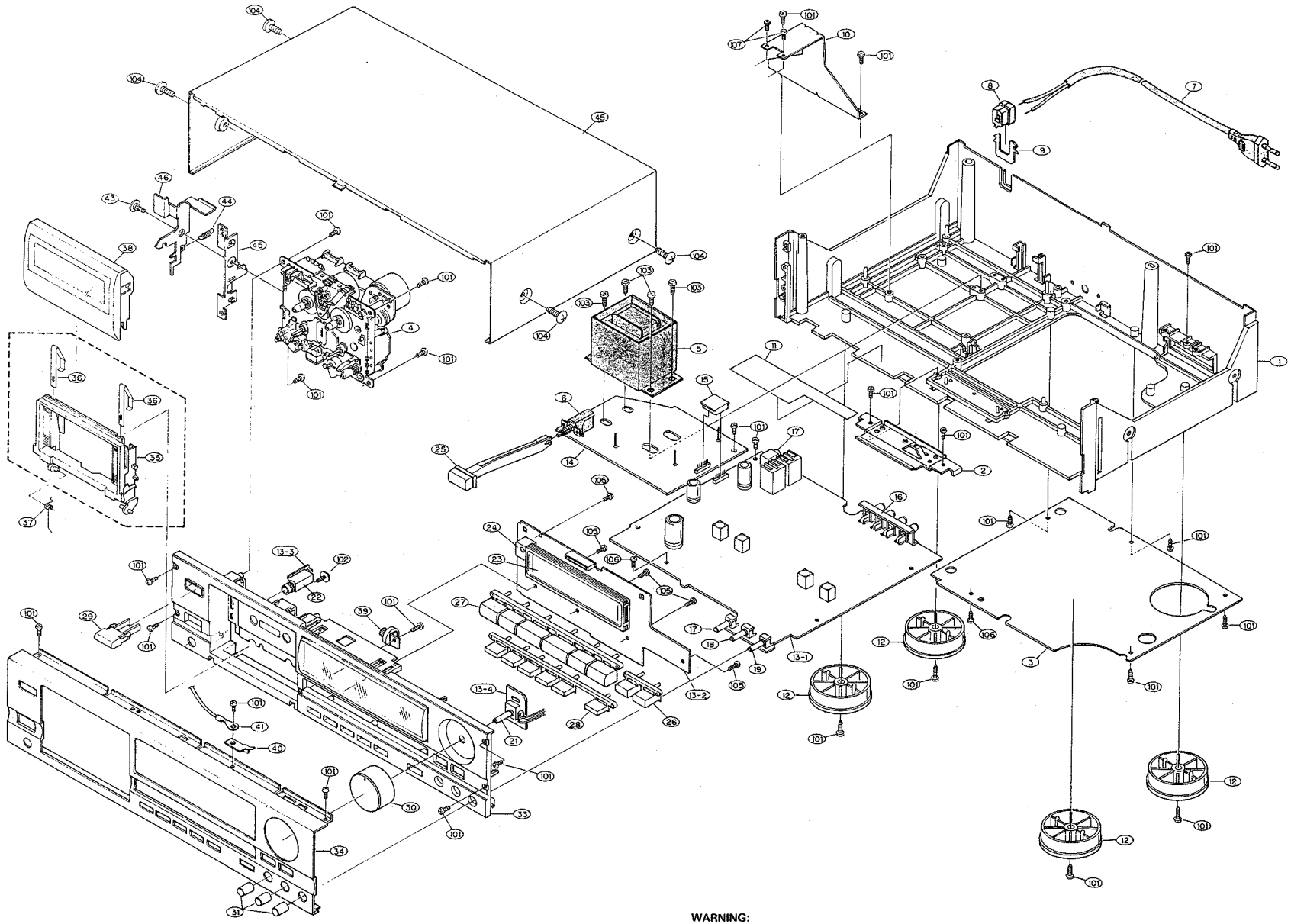

WARNING:
Parts marked with this symbol ⚠ ▨ have critical characteristics.
Use ONLY replacement parts recommended by the manufacturer.

EXPLODED VIEW OF CASSETTE MECHANISM UNIT

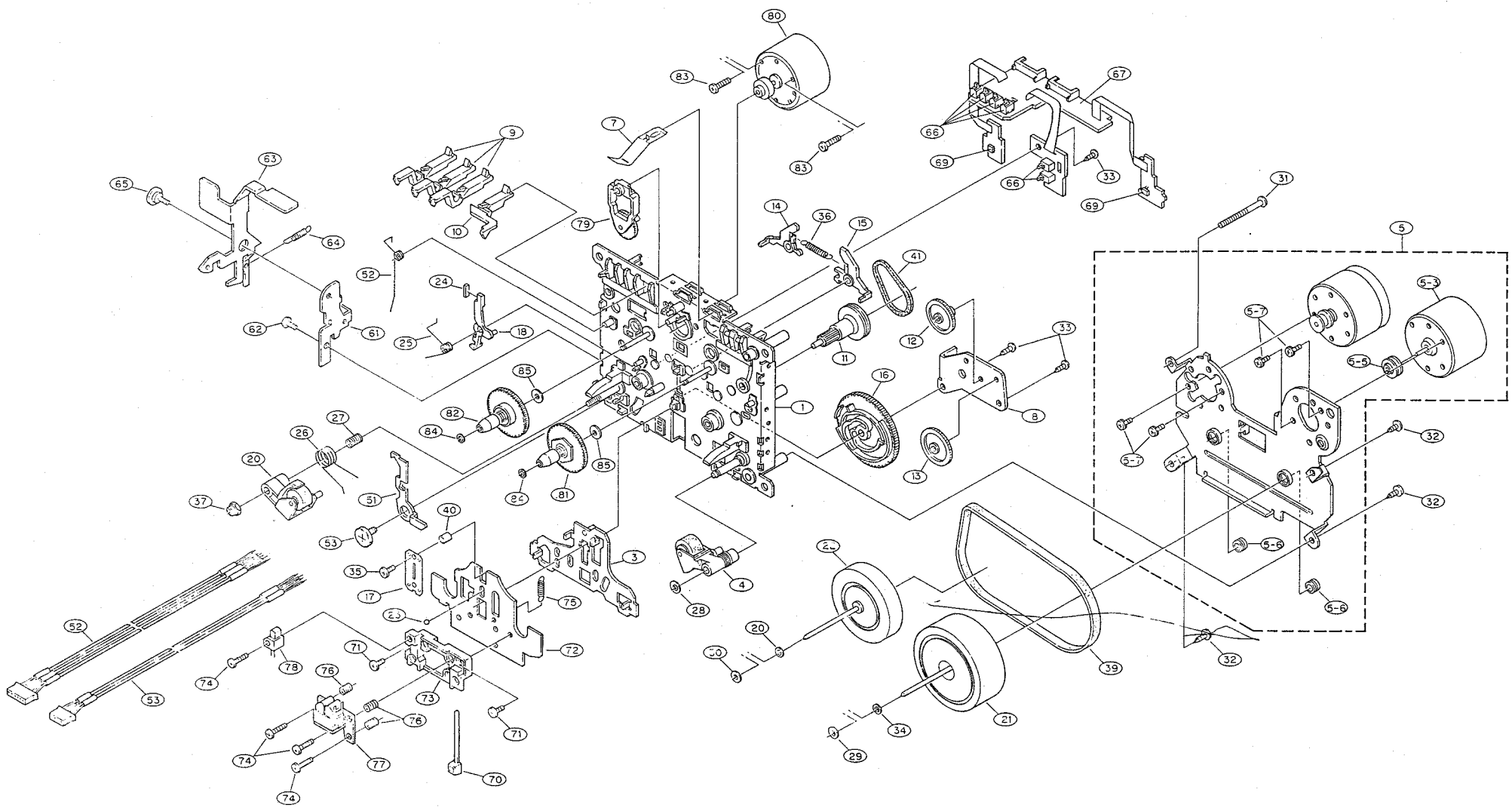

PARTS LIST OF CASSETTE MECHANISM
EXPLODED VIEW

Ref. No.	Part No.	Part Name	Remarks
1	9DF 6121 74	CHASSIS BASE BLK	
3	9DF 5121 22	PLATE BASE BLK	
4	9DF R20L 22	PINCH ROLLER ASS'Y	
5	9DF 5252 84	MOTOR MAIN BLK	
5-3	9DF W15C 11	MMN-6F4RB82	
5-5	9DF D47L 11	PULLEY	
5-6	9DF M177 22	WHEEL CATCH SCREW	
5-7	9DU G11S 14	SCREW 2.6×3.5 ZN	
5-8			
5-9	9DF J141 12	W/RUMINA 1.9×0.25T	
7	9DF C52H 13	CASSETTE SPRING SH	
8	9DF C57H 11	P.C.B. BKT H	
9	9DF D44T 14	REC DETECT LEVER	
10	9DF D44V 12	METAL DETECT LEVER(L)	
11	9DF D48Y 21	GEAR A	
12	9DF D49A 11	GEAR B	
13	9DF D49B 11	GEAR C	
14	9DF D49C 11	BLAKE L	
15	9DF D49D 12	BLAKE R	
16	9DF D48W 12	CAM GEAR H	
17	9DF C57G 12	THRUST SPRING	
18	9DF D49E 13	B.T ARM	
20	9DF R23F 11	PINCH ROLLER	
21	9DF R23D 11	ASS'Y F/W T	
22	9DF R23E 11	ASS'Y F/W S	
23	9DM M113 11	STEEL BALL	
24	9DF Z11Y 12	FELT H	
25	9DF K31A 11	B.T SP	
26	9DF K26S 14	PINCH ROLLER SP (L)	
27	9DF K26V 11	H ADJUST SP	
28	9DF J123 22	W/RUMINA C 3.5×0.25	
29	9DF J141 11A	OIL SHEEL 2.4×0.25	
30	9DF J141 14A	OIL SHEEL 2.15×0.25	
31	9DU G19G 11	S TYTE SCREW M2.6×25	
32	9DU G12H 14	WAVE SCREW 2.6×8 ZN	
33	9DU G12H 11	WAVE SCREW 2.0×6 ZN	
34	9DF J111 30	POLY. WASHER 2.6×0.25	
35	9DU G22B 11	SCREW TT 2.0×7 ZN	
36	9DF K20R 12	BLAKE SP	
37	9DU G20L 12	NYLON NUT	
39	9DF F16M 31	MAIN BELT	
40	9DF L42C 11	SPACER	
41	9DF F18R 11	BELT	
51	9DF C39L 70	EJECT LOCK ARM	
52	9DW H62R 02	HD CABLE (R/E)	
53	9DW H62S 02	HD CABLE (P.B)	
61	9DF C33L 51	DAMPER BKT	
62	9DK G194 28	SCREW TT 2.6×4 ZN	
63	9DF C52P B1A	EJECT ARM (L)	
64	9DF K29H 11	EJECT LOCK SPRING	
65	9DU G14M 11	SPECIAL SCREW	
66	9DU E16E 11	PUSH SWITCH	
68	9DA W12M 00	REEL SENSOR	
70	445 0033 005	BUNDOLE BAND	
71	9DK G194 29	SCREW 2.6×5 ZN	
72	9DF C57D 12	HEAD BASE D	
73	9DF D40L 13	HEAD SPACER	
74	9DF G140 24	SCREW 32.0×8 NI	
75	9DF K30W 11	HEAD BASE SP H	
76	9DF K30Y 11	AZIMUS SP H	
77	9DF U20D 11	H-2381	
78	9DF U20C 11	HAJAB3523A	
79	9DF 5170 53	IDLER BLK	
80	9DF 5643 02	MOTOR REEL BLK	
81	9DF 6230 37	REEL BASE BLK	
82	9DF 6230 59	REEL BASE BLK	
83	9DU G14C 13	SCREW 2.6×10 ZN	
84	9DF J111 17	WASHER 1.7×0.25	
85	9DU J12V 11	POLY. WASHER 2.1×0.5	

NOTE FOR PARTS LIST

- Part indicated with the mark "⊙" are not always in stock and possibly to take a long period of time for supplying, or in some case supplying of part may be refused.
- When ordering of part, clearly indicated "1" and "l" (i) to avoid mis-supplying.
- Ordering part without stating its part number can not be supplied.
- Part indicated with the mark "★" is not illustrated in the exploded view.
- Not including Carbon Film ±5%, 1/6 W, 1/4 W Type in the P. W. Board parts list.
- Parts marked with this symbol ⚠ have critical characteristics. Use ONLY replacement parts recommended by the manufacturer.

- Refer to the following table for the codes of the resistors and capacitors appearing on the parts list.

- **Resistors**

Ex.: RN 14K 2E 182 G FR
Type / Shape and performance / Power / Resistance / Allowable error / Others

RD : Carbon RC : Fixed RS : Metallic film RW : Winding RN : Metal film RK : Metal mixture	2B : 1/8W 2E : 1/4W 2H : 1/2W 3A : 1W 3D : 2W 3F : 3W 3H : 5W	F : ±1% G : ±2% J : ±5% K : ±10% M : ±20%	P : Pulse-resistant type NL : Low noise type NB : Non-burning type FR : Fuse resistor F : Lead wire forming

★ **Resistance**
1 8 2 ⇨ 1800Ω = 1.8kΩ
2 — Indicates number of zeros after effective number
1 8 — 2-digit effective number, decimal point indicated by R.
• Units: Ω

- **Capacitors**

Ex.: CE 04W 1H 2R2 M BP
Type / Shape and performance / Dielectric strength / Capacity / Allowable error / Others

CE : Aluminum foil electrolyte CA : Aluminum solid electrolyte CS : Tantalum electrolyte CQ : Film CK : Ceramic CC : Ceramic CP : Oil CM : Mica CF : Metallized CH : Metallized	0J : 6.3V 1A : 10V 1C : 16V 1E : 25V 1V : 35V 1H : 50V 2A : 100V 2B : 125V 2C : 160V 2D : 200V 2E : 250V 2H : 500V 2J : 630V	F : ±1% G : ±2% J : ±5% K : ±10% M : ±20% Z : +80% −20% P : +100% −0% C : ±0.25pF D : ±0.5pF = : Others	HS : High stability type BP : Non-polar type HR : Ripple-resistant type DL : For charge and discharge HF : For assuring high frequency U : UL part C : CSA part W : UL-CSA type F : Lead wire forming

★ **Capacity**
2 R 2 ⇨ 2.2μF
2 — 1-digit effective number, decimal point indicated by R.
2 R — 2-digit effective number, decimal point indicated by R.
• Units: μF, (for P, pF (μμF)
• When the dielectric strength is indicated in AC, "AC" is included after the dielectric strength value.

P. W. BOARD OF KU-9292 AUDIO/METER UNIT

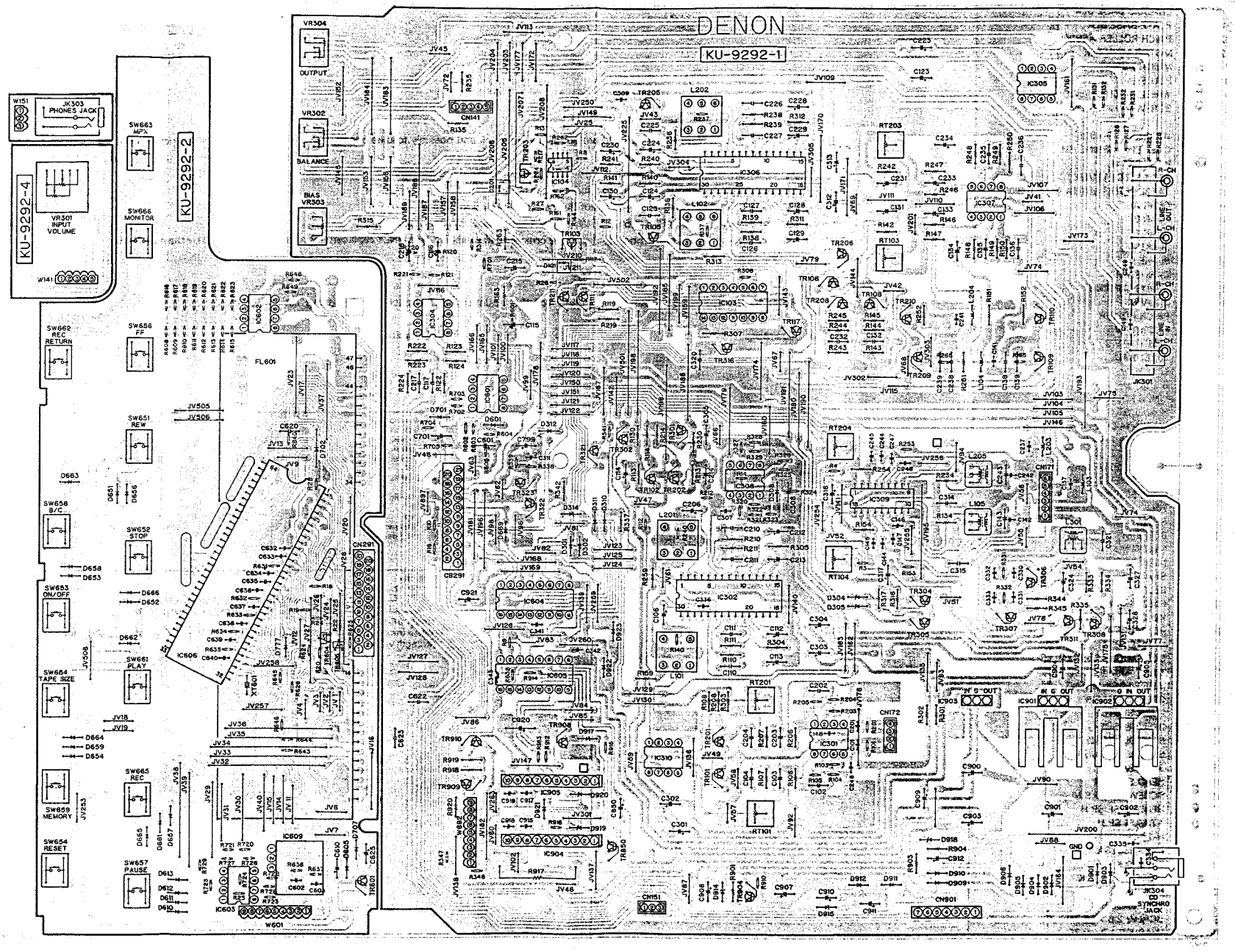

-2337 POWER SUPPLY UNIT

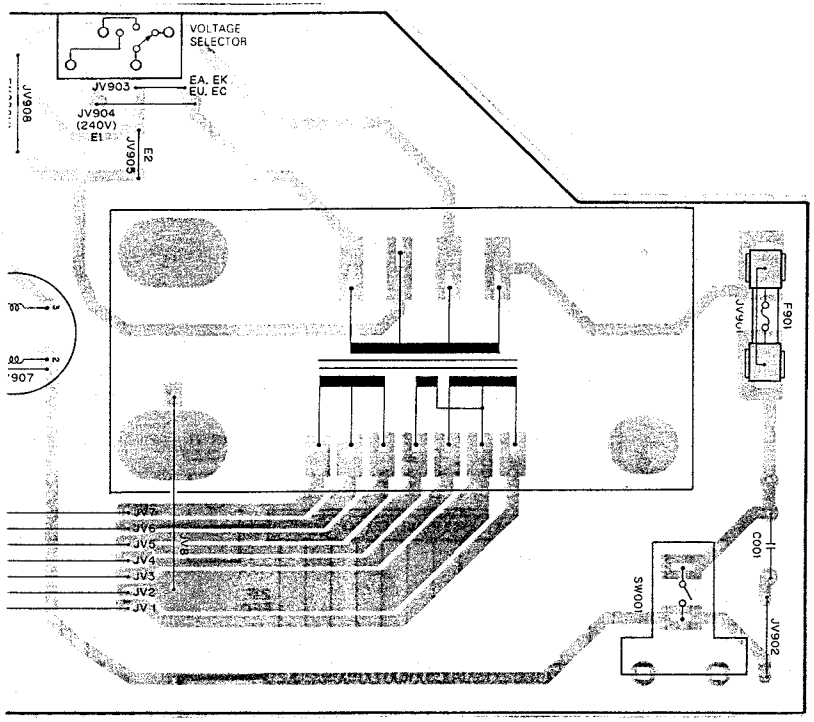

's the power circuit parts used for the 3U-2337 board by area.
, parts not used —.

ower Trans Part No.	Voltage Selector	FUSE F901	JV901	JV903	JV904	JV905	JV908
335756001	—	—	○	—	—	○	—
335760000	○	○	—	—	○	—	○

BUNDLE DIAGRAM

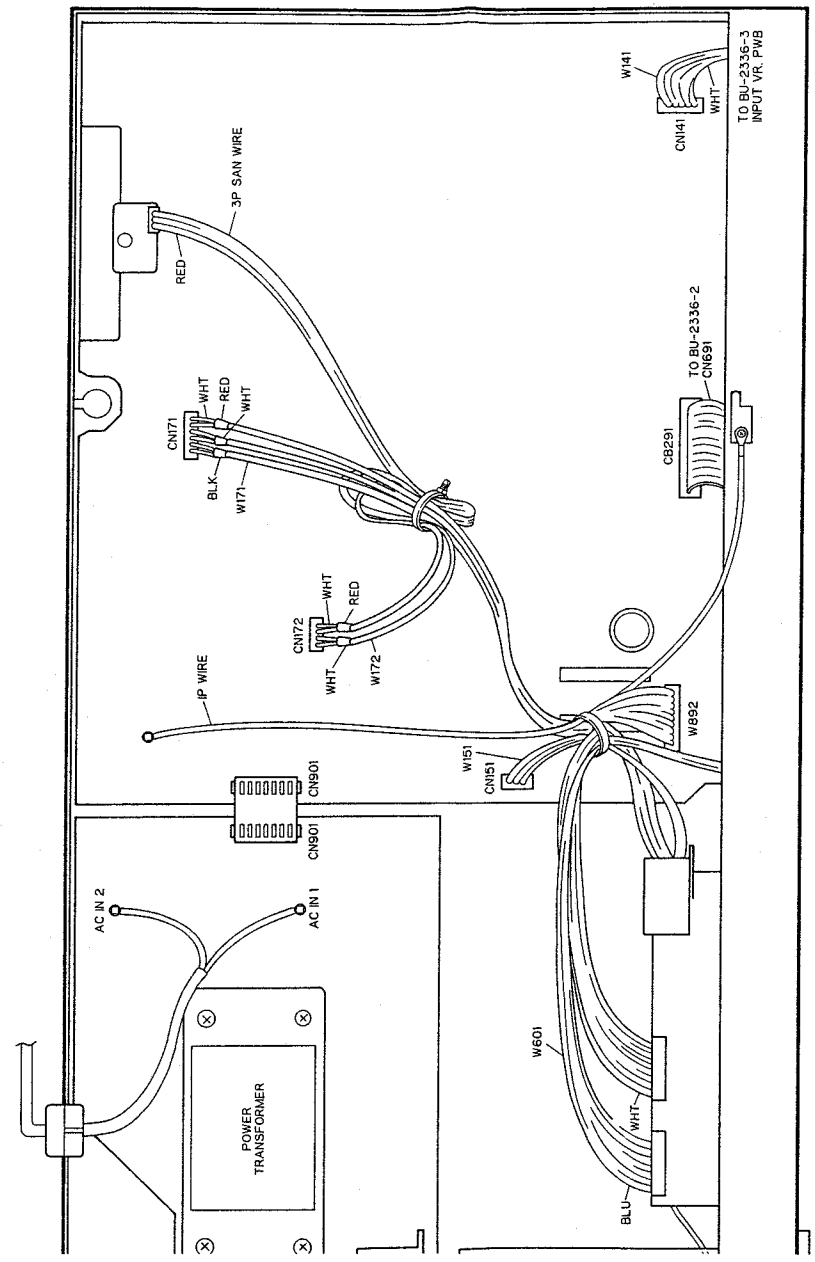

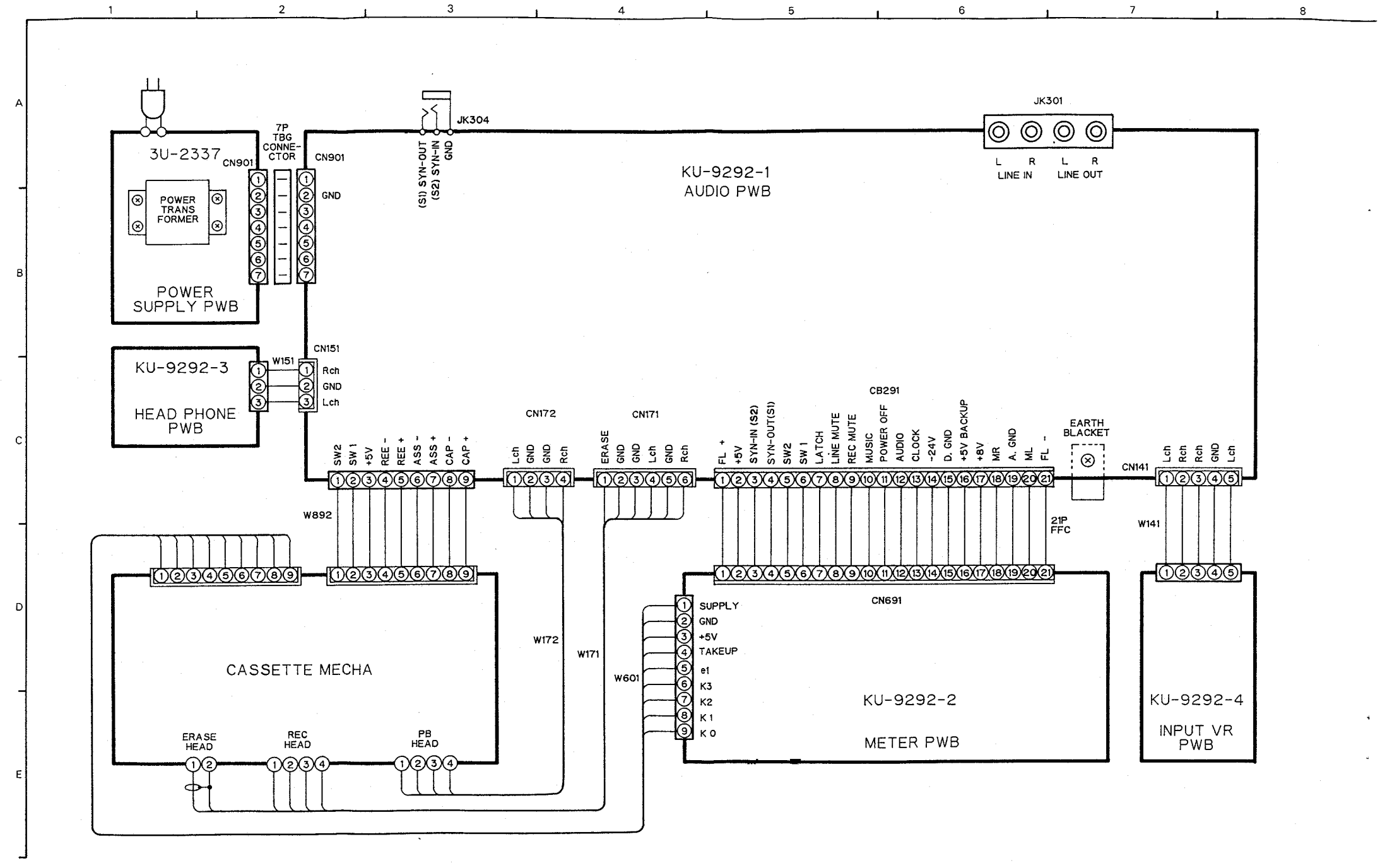
3U-2337
POWER TRANS FORMER
POWER SUPPLY PWB
CN901
7P TBG CONNE-CTOR
CN901
GND
JK304
(S1) SYN-OUT
(S2) SYN-IN
GND
KU-9292-1
AUDIO PWB
JK301
L R L R
LINE IN
LINE OUT
KU-9292-3
HEAD PHONE PWB
W151
CN151
Rch
GND
Lch
CN172
CN171
CB291
EARTH BLACKET
CN141
SW2 SW1 +5V REE - REE + ASS - ASS + CAP - CAP +
Lch GND GND Rch
ERASE GND GND Lch GND Rch
FL + +5V SYN-IN (S2) SYN-OUT(S1) SW2 SW1 LATCH LINE MUTE REC MUTE MUSIC POWER OFF AUDIO CLOCK -24V D. GND +5V BACKUP +8V MR A. GND ML FL -
Lch Rch Rch GND Lch
W892
21P FFC
W141
CASSETTE MECHA
W172
W171
W601
CN691
SUPPLY
GND
+5V
TAKEUP
e1
K3
K2
K 1
K 0
KU-9292-2
METER PWB
KU-9292-4
INPUT VR PWB
ERASE HEAD
REC HEAD
PB HEAD

SCHEMATIC DIAGRAM

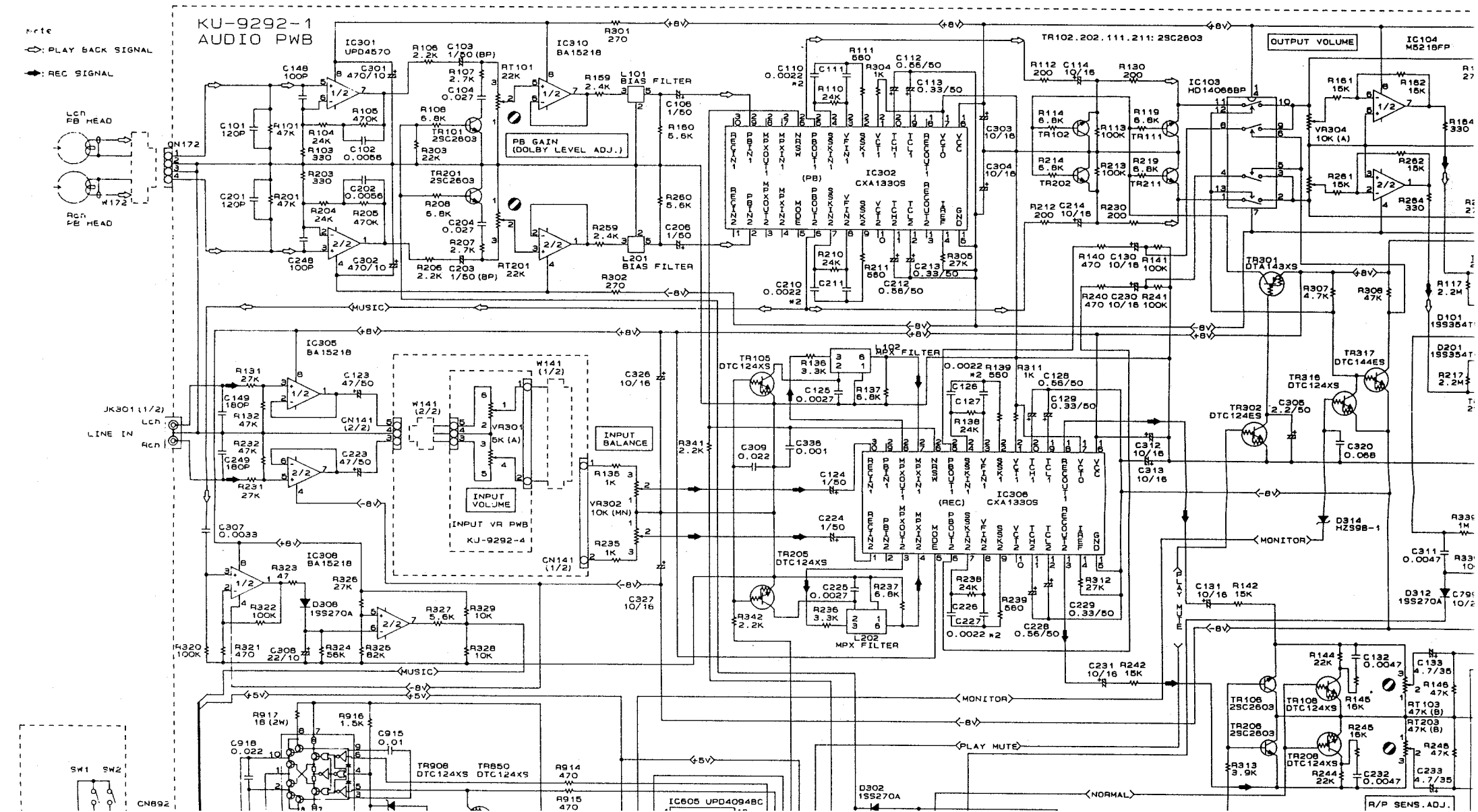

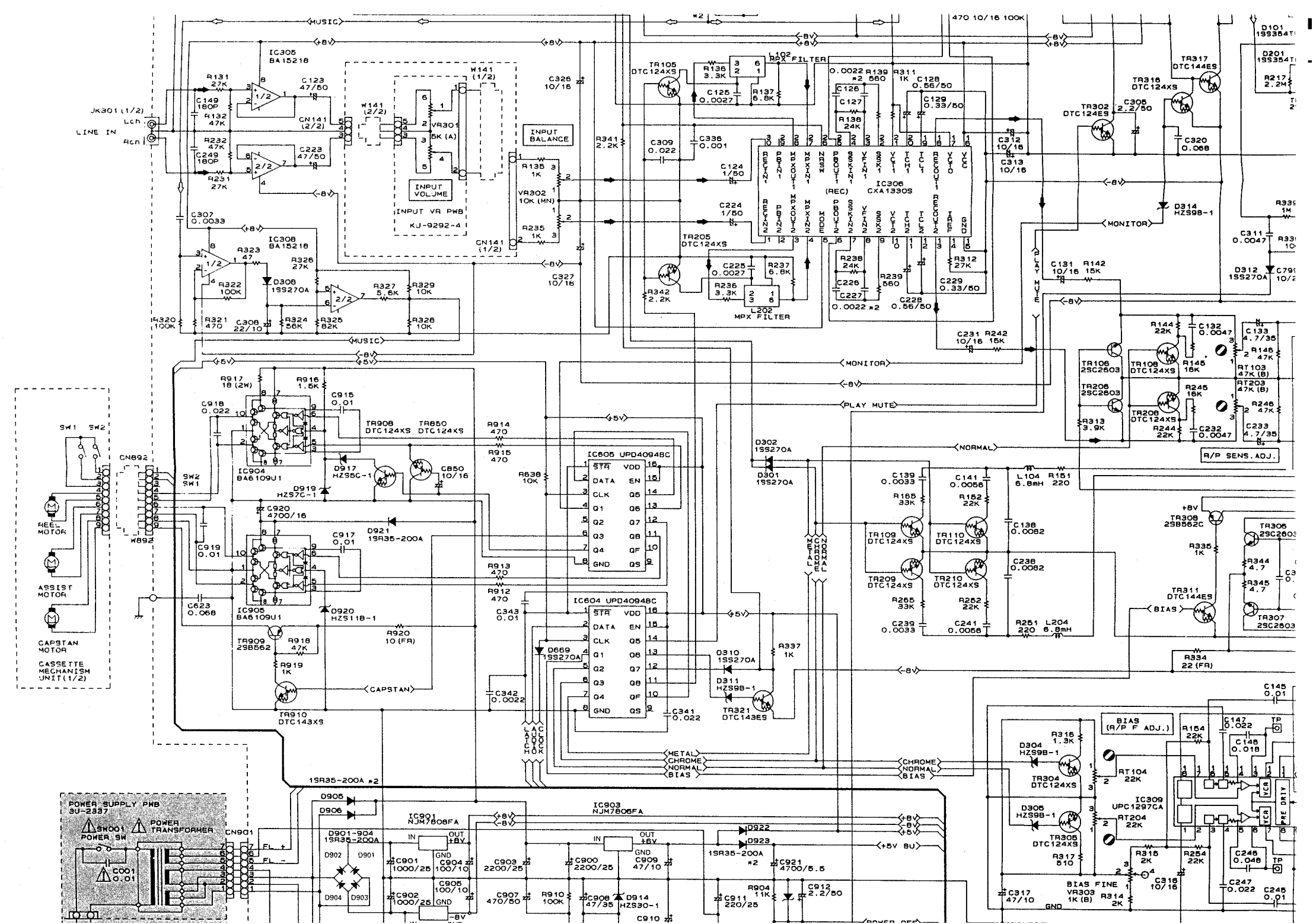
IC305 BA15218
IC308 BA15218
IC904 BA6109U1
IC905 BA6109U1
IC605 UPD40948C
IC604 UPD40948C
IC306 CXA1330S
IC309 UPC1297CA
IC901 NJM7808FA
IC903 NJM7808FA
L202 MPX FILTER
L102 MPX FILTER
INPUT BALANCE
INPUT VOLUME
INPUT VR PWB KJ-9292-4
LINE IN
Lch
Rch
JK301 (1/2)
CN141 (2/2)
CN141 (1/2)
W141 (1/2)
W141 (2/2)
VR301 5K (A)
VR302 10K (MN)
CN892
W892
REEL MOTOR
ASSIST MOTOR
CAPSTAN MOTOR
CASSETTE MECHANISM UNIT(1/2)
SW1
SW2
POWER SUPPLY PWB 3U-2337
SW001 POWER SW
POWER TRANSFORMER
CN901
FL +
FL -
MUSIC
MONITOR
PLAY MUTE
NORMAL
CAPSTAN
BIAS
CHROME
METAL
LATCH
LOCK
BIAS (A/P F ADJ.)
BIAS FINE VR303 1K (B)
A/P SENS. ADJ.
+5V BU
POWER OFF

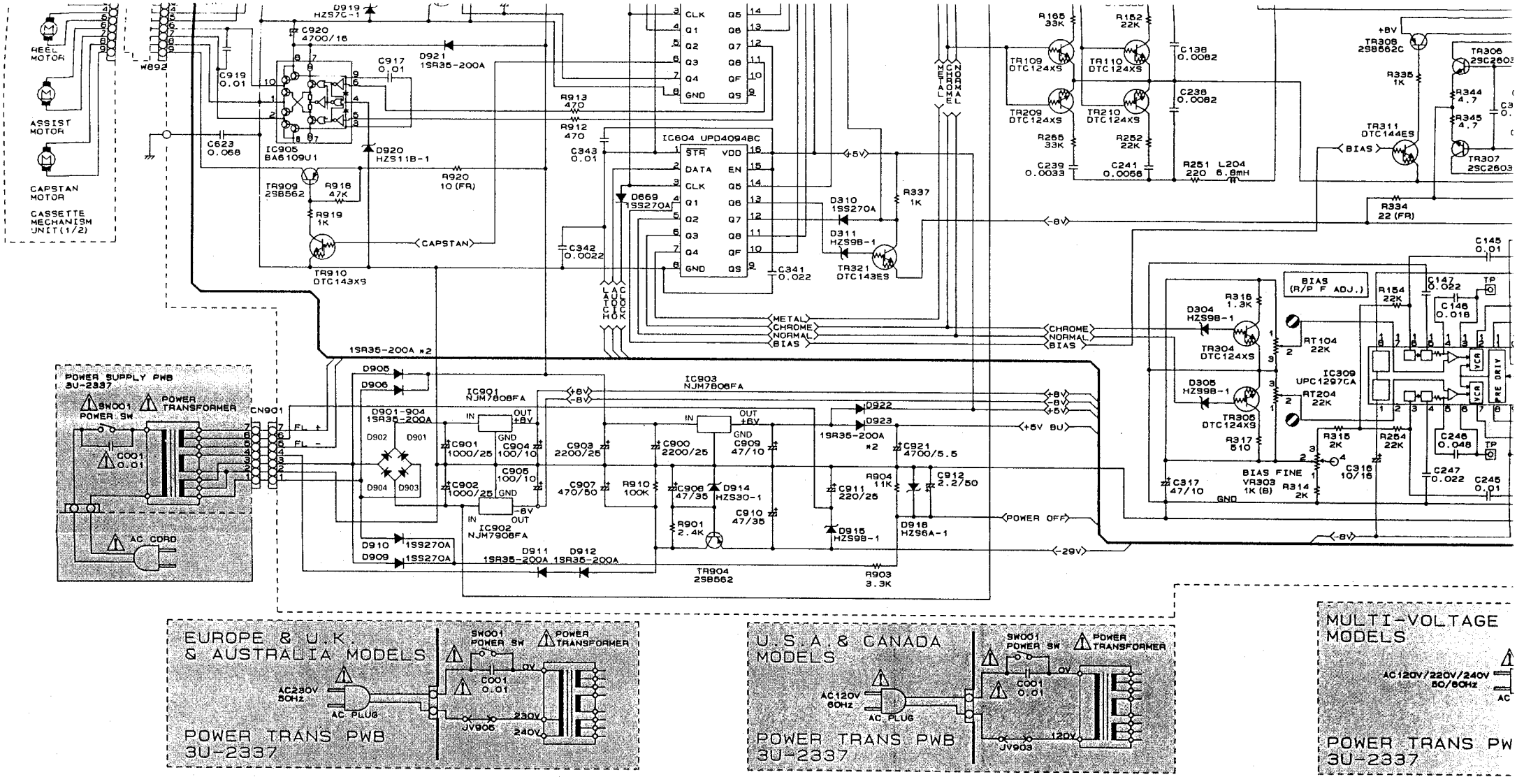

WARNING:
Parts marked with this symbol ⚠ ▒ have critical cl
Use ONLY replacement parts recommended by the man

CAUTION:
Before returning the unit to the customer, meke sure yo
check or (2) a line to chassis resistance check. If the leak
or if the resistance from chassis to either side of the pov
unit is defective.

WARNING:
DO NOT return the unit to the customer until the probler

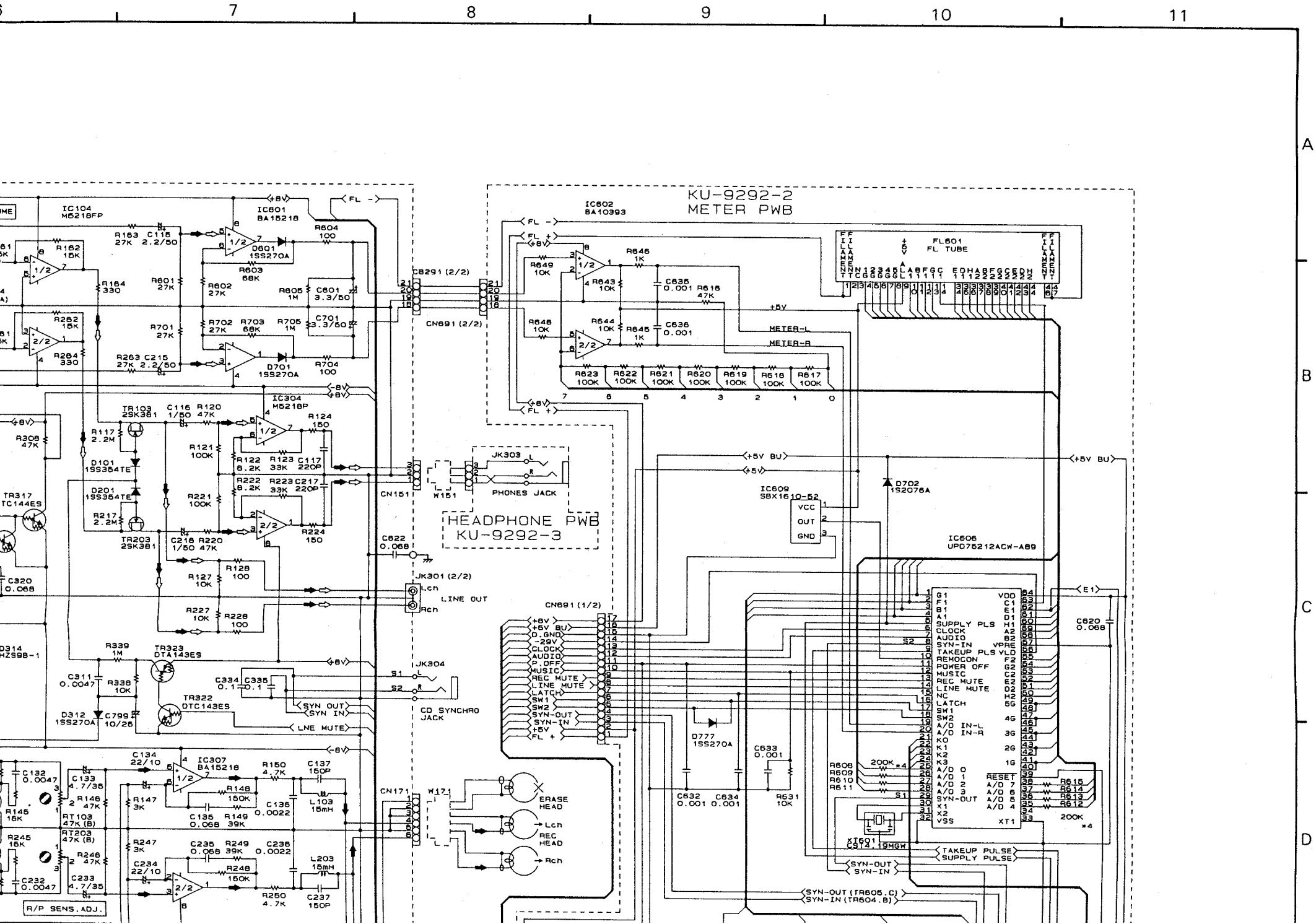
KU-9292-2
METER PWB
HEADPHONE PWB
KU-9292-3
IC104
M5218FP
IC601
BA15218
IC602
BA10393
IC304
M5218P
IC307
BA15218
IC609
SBX1610-52
IC606
UPD75212ACW-A89
FL601
FL TUBE
JK303
PHONES JACK
JK301 (2/2)
LINE OUT
JK304
CD SYNCHRO JACK
CN691 (2/2)
CN151
CN171
W151
W171
ERASE HEAD
REC HEAD
R/P SENS.ADJ.
TAKEUP PULSE
SUPPLY PULSE
SYN-OUT
SYN-IN
METER-L
METER-R
+5V BU
+5V
FL -
FL +
+8V
-8V
E1

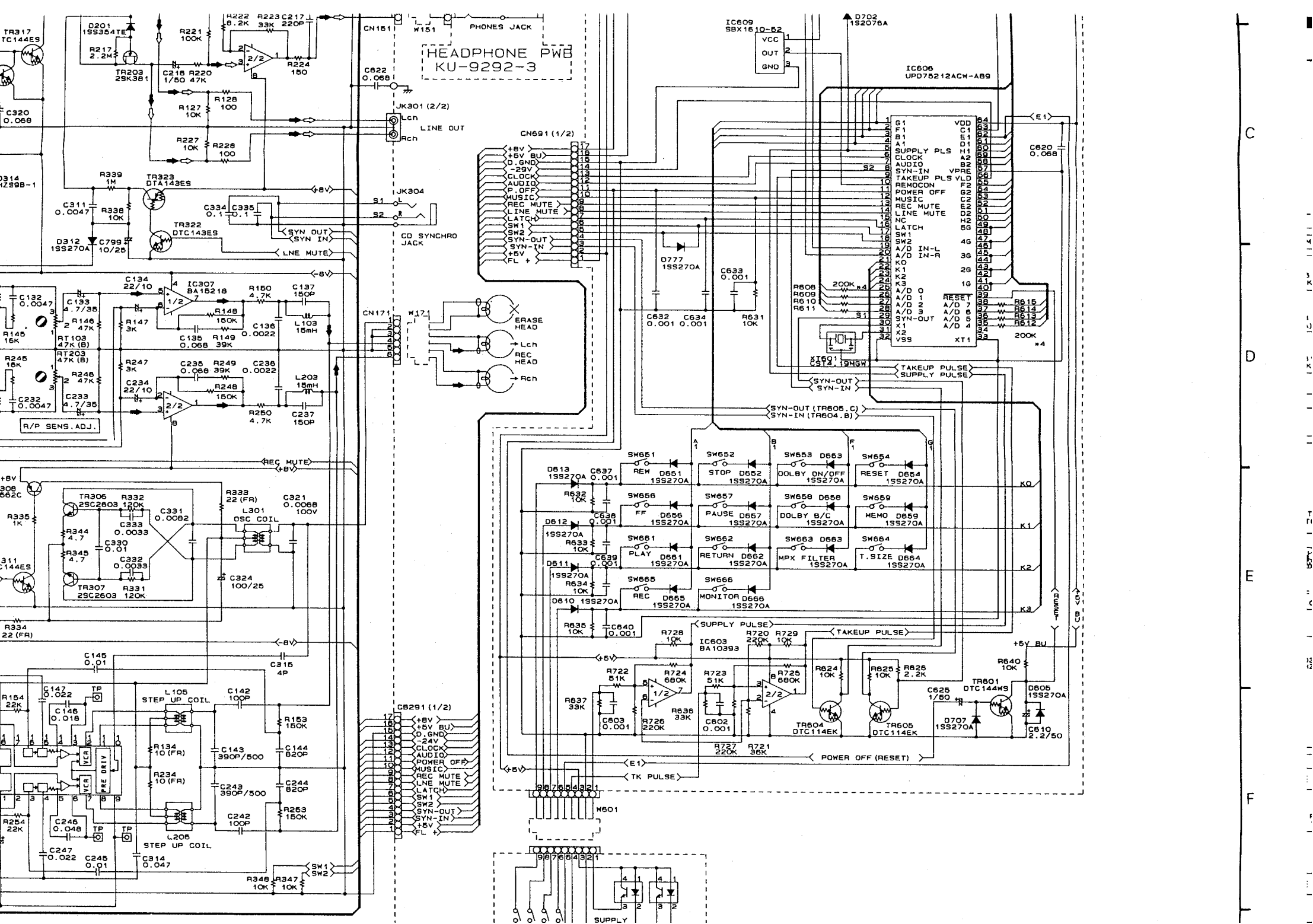
HEADPHONE PWB
KU-9292-3
PHONES JACK
LINE OUT
CD SYNCHRO JACK
R/P SENS.ADJ.
IC606
UPD75212ACW-A89
IC609
SBX1610-52
IC603
BA10393
IC307
BA15218
TR317
TC144ES
TR323
DTA143ES
TR322
DTC143ES
TR203
2SK381
TR306
2SC2603
TR307
2SC2603
TR604
DTC114EK
TR605
DTC114EK
TR601
DTC144WS
L301
OSC COIL
L105
STEP UP COIL
L205
STEP UP COIL
ERASE HEAD
REC HEAD
SUPPLY
TAKEUP PULSE
SUPPLY PULSE
POWER OFF (RESET)
TK PULSE
SYN-OUT (TR605.C)
SYN-IN (TR604.B)
REW
STOP
DOLBY ON/OFF
RESET
FF
PAUSE
DOLBY B/C
MEMO
PLAY
RETURN
MPX FILTER
T.SIZE
REC
MONITOR

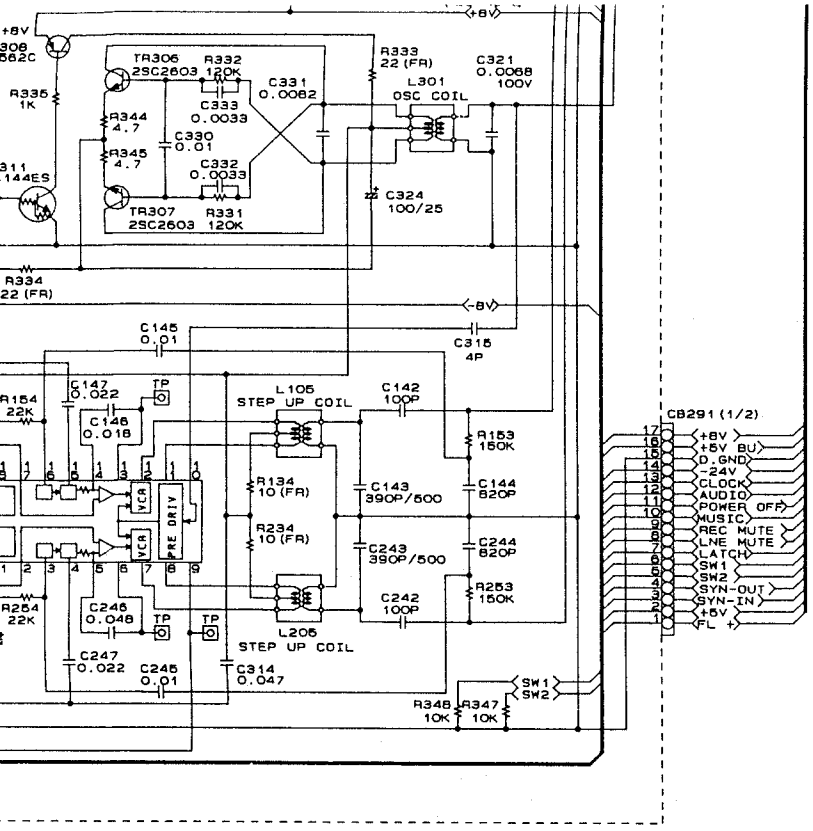

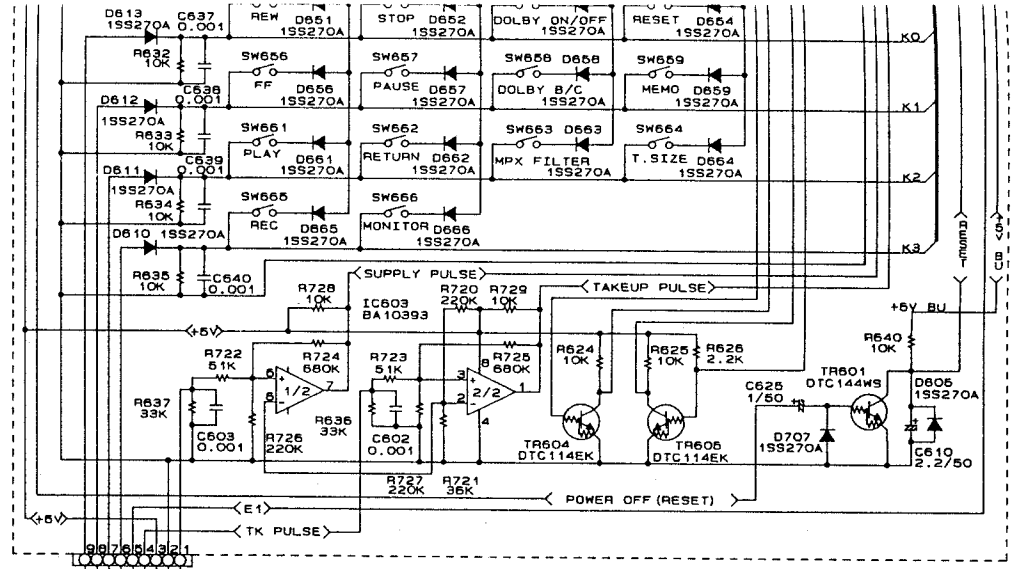

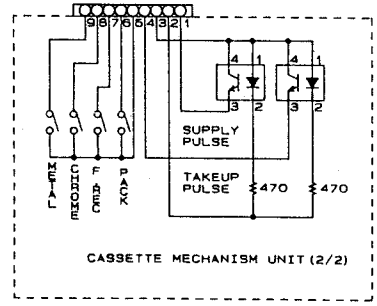

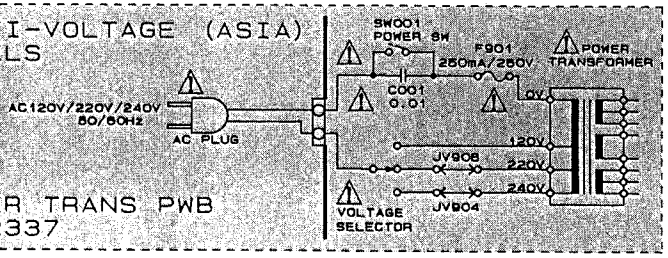

⚠ ▭ have critical characteristics.
commended by the manufacturer.

customer, meke sure you make either (1) a leakage current
istance check. If the leakage current exceeds 0.5 miliamps,
to either side of the power cord is less than 240 kohms, the

ustomer until the problem is located and corrected.

NOTES

ALL RESISTANCE VALUES IN OHM. K = 1,000 OHM, M = 1,000,000 OHM
ALL CAPACITANCE VALUES IN MICRO FARAD. P = MICRO-MICRO FARAD
EACH VOLTAGE AND CURRENT ARE MEASURED AT NO SIGNAL INPUT CONDITION.
CIRCUIT AND PARTS ARE SUBJECT TO CHANGE WITHOUT PRIOR NOTICE.

SEMICONDUCTORS

• IC

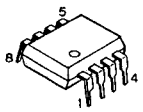

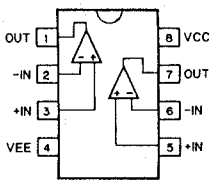

BA10393
BA15218
M5218P
μPC4570

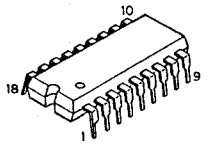

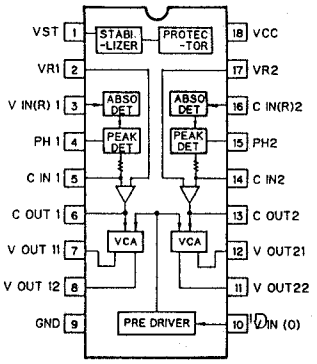

μPC1297CA

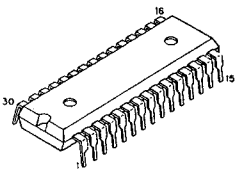

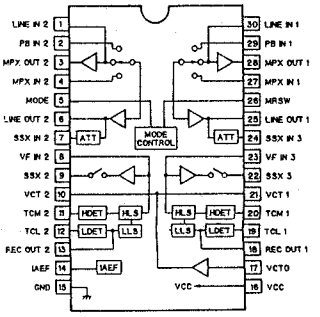

CXA1330S

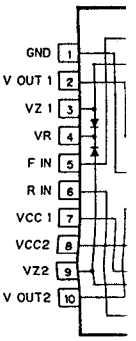

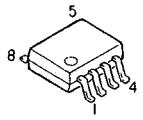

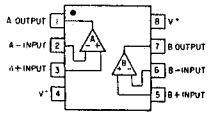

M5220FP

• Transistors

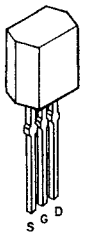

2SK381

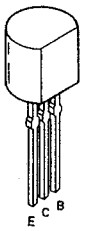

2SA933
2SC1740S
2SC2603

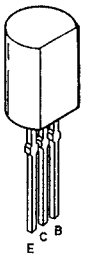

2SB562

• Diod

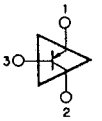

DTA143ES
DTA143XS

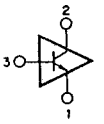

DTC124ES
DTC124XS
DTC144ES
DTC143ES
DTC143XS
DTC144WS

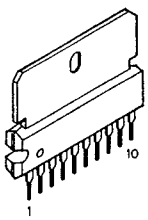

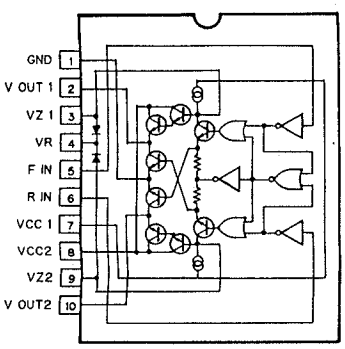

BA6109

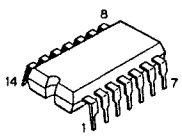

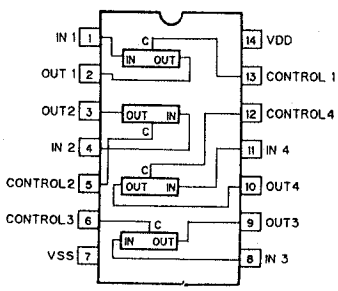

HD14066BP

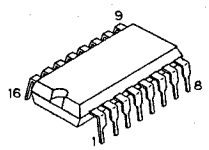

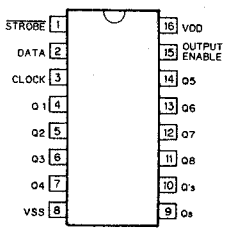

μPD4094BC

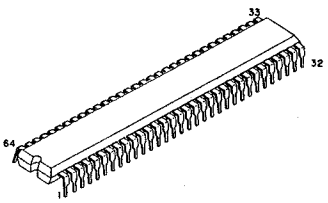

μPD75212ACW-A89

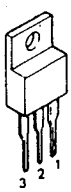

3 GND
2 INPUT
1 OUTPUT

NJM7908FA

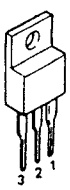

3 INPUT
2 GND
1 OUTPUT

NJM7806FA(S)
NJM7808FA(S)

• Diodes

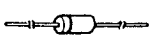

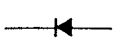

ISS270A
ISR35-200A

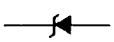

HZS3C-1 HZS7B-3
HZS5B-3 HZS9A-2
HZS6C-3 HZS11A-3
HZS27-3